TECHNICAL MANUAL

OPERATOR AND UNIT MAINTENANCE MANUAL

LOCOMOTIVE, DIESEL-ELECTRIC, 56-1/2-INCH GAGE, 80-TON, 670 HP, 0-4-4-0 WHEEL, MODEL B-B-160/160-4GE747-A1 NSN 2210-01-158-2980

HEADQUARTERS, DEPARTMENT OF THE ARMY
18 MAY 1987

CHANGE

NO. 1

HEADQUARTERS
DEPARTMENT OF THE ARMY
WASHINGTON, D.C., 22 May 1991

Operator and Unit Maintenance Manual

LOCOMOTIVE, DIESEL-ELECTRIC,
56-1/2-INCH GAGE, 80-TON, 670 HP,
0-4-4-0 WHEEL,
MODEL B-B-160/160-4GE747-A1
NSN 2210-01-158-2980

Approved for public release; distribution is unlimited

TM 55-2210-224-12, 18 May 1987, is changed as follows:

1. Remove and insert pages as indicated below. New or changed text material is indicated by a vertical bar in the margin. An illustration change is indicated by a miniature pointing hand.

Remove pages	Insert pages
i and ii	i and ii
3-1 and 3-2	3-1 and 3-2
- - -	Appendix G/(blank)
- - -	G-1/(G-2 blank) through G-55/(G-56 blank)

2. Retain this sheet in front of manual for reference purposes.

By Order of the Secretary of the Army:

CARL E. VUONO
General, United States Army
Chief of Staff

Official:

THOMAS F. SIKORA
Brigadier General, United States Army
The Adjutant General

DISTRIBUTION:
To be distributed in accordance with DA Form 12-25E, (qty rqr block no. 2678)

WARNING

EXHAUST GASES CAN BE DEADLY

Exhaust gases can produce symptoms of headache, dizziness, loss of muscular control, or coma. Permanent brain damage or death can result from severe exposure. You can ensure your safety by following this rule:

DON'T operate the engine in an enclosed area unless it is properly ventilated.

If you notice exhaust odors or exposure symptoms, IMMEDIATELY VENTILATE the area. If the symptoms persist, remove the affected personnel and treat them as follows:

- **Expose them to fresh air.**
- **Keep them warm.**
- **DON'T PERMIT PHYSICAL EXERCISE. If necessary, give artificial respiration. Refer to FM 21-11, First Aid for Soldiers.**

WARNING

A blue signal flag shall be placed on both ends of the locomotive while doing maintenance on, under, or around it. The locomotive shall not be moved or coupled while the blue signal flag is displayed. Only the maintenance personnel who placed the blue signal flag(s) have authority to remove it. Failure to observe these warnings may result in injury or death to personnel.

WARNING

High voltage is used in the operation of equipment. Do not be misled by the term LOW VOLTAGE. Potentials as low as 50 volts may cause death.

WARNING

Remove rings, bracelets, wristwatches, and neck chains before working around the locomotive. Jewelry can catch on equipment and cause injury, or may short across an electrical circuit and cause severe burns or electrical shock.

WARNING

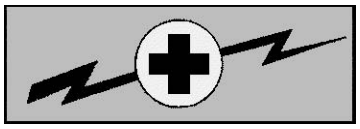

WARNING

HIGH VOLTAGE

is used in the operation of this equipment.

DEATH ON CONTACT

may result if personnel fail to observe safety precautions.

Never work on electrical equipment unless there is at least one other person nearby who is familiar with the operation and hazards of that equipment. That person should also be competent in giving first aid. When an operator helps a technician, he must be warned about dangerous areas.

Whenever possible, shut off the power supply to equipment before beginning work. When working inside the equipment with power off, take special care to ground every capacitor. Electrical shock may occur if personnel fail to observe safety precautions.

Be careful not to contact high-voltage connections when installing or operating this equipment.

Whenever possible, keep one hand away from the equipment to reduce the hazard of current flowing through vital organs of the body.

WARNING

When traction motor or under-locomotive equipment must be inspected while the engine is running, set airbrakes and use wooden blocks or a chain and block both sides of one wheel. Move reverser to neutral position and remove from the controller. This will prevent accidental movement of the locomotive.

WARNING

Should a fire develop on the locomotive and carbon dioxide is used to extinguish the flame, do not breathe the fumes. These fumes are toxic.

WARNING

Fuel is very flammable and can explode easily. To avoid serious injury or death, keep fuel away from open fire and keep fire extinguisher within easy reach when working with fuel. Do not work on fuel system when engine is hot. Fuel can be ignited by hot engine. Shut off engine and do not smoke while refueling.

WARNING

Fuel and oil are slippery and can cause falls. To avoid injury, wipe up spilled fuel or oil with rags.

WARNING

If and engine has been shut down from a suspected crankcase bearing failure, do not open hand hole covers or top deck covers until engine has completely cooled. Overheated bearings and an inrush of oxygen (air), combined with hot oil vapors, could cause an explosion and fire.

WARNING

Never remove the engine cooling system cap when the engine is hot. This is a high-pressure cooling system, and escaping steam or hot water can cause serious burns.

WARNING

Operation of this locomotive presents a noise hazard to personnel in the area. The noise level exceeds the allowable limits for unprotected personnel. Wear aural protectors or earplugs.

WARNING

Water/rain make catwalk and steps slippery and may cause injury or death. Be careful when using wet catwalks and steps.

WARNING

Drycleaning solvent P-D-680 is toxic and flammable. Wear protective goggles and gloves and use only in a well-ventilated area. Avoid contact with skin, eyes, and clothes and don't breathe vapors. Do not use near open flame or excessive heat. The flash point is 100 - 138°F (38 - 59°C). If you become dizzy, get fresh air and get medical aid immediately. If contact with eyes is made, wash your eyes and get medical aid immediately.

WARNING

Compressed air used for cleaning purposes will not exceed 30 psi (207 kPa). Do not direct compressed air against skin. Use goggles or full face shield.

WARNING

Be careful not to short out battery terminals. Do not smoke or use open flame near batteries. Batteries may explode from a spark. Battery acid is harmful to skin and eyes.

WARNING

Beware of close clearances when operating locomotive on docks, in yards, or close to buildings and obstructions. Serious injury or death could occur.

WARNING

When operating multiple units, do not cross from unit to unit while they are in motion. Serious injury or death could occur.

WARNING

Shut all doors before setting locomotive in motion. Open or swinging doors could cause serious injury.

TECHNICAL MANUAL

NO. 55-2210-224-12

HEADQUARTERS
DEPARTMENT OF THE ARMY
WASHINGTON, D.C., 18 May 1987

OPERATOR AND UNIT MAINTENANCE MANUAL

LOCOMOTIVE, DIESEL-ELECTRIC:
56-1/2-INCH GAGE, 80-TON, 670 HP,
0-4-4-0 WHEEL
MODEL B-B-160/160-4GE747-A1
NSN 2210-01-158-2980

REPORTING OF ERRORS AND RECOMMENDING IMPROVEMENTS

You can help improve this manual. If you find any mistakes, or if you know of a way to improve the procedures, please let us know. Mail your letter, DA Form 2028 (Recommended Changes to Publications and Blank Forms) or DA Form 2028-2 located in the back of this manual direct to: Commander, US Army Troop Support Command, ATTN: AMSTR-MMTS, 4300 Goodfellow Blvd., St. Louis, MO 63120-1798. A reply will be furnished to you.

TABLE OF CONTENTS

		Page
CHAPTER 1	INTRODUCTION	
Section I	General Information	1-1
Section II	Equipment Description and Data	1-3
Section III	Technical Principles of Operation	1-12
CHAPTER 2	OPERATING INSTRUCTIONS	
Section I	Description and Use of Operator Controls and Indicators	2-1
Section II	Operator/Crew Preventive Maintenance Checks and Services (PMCS)	2-16
Section III	Operation Under Usual Conditions	2-24
Section IV	Operation of Auxiliary Equipment	2-43
Section V	Operation Under Unusual Conditions	2-44
CHAPTER 3	OPERATOR/CREW MAINTENANCE INSTRUCTIONS	
Section I	Lubrication Instructions	3-1
Section II	Operator Troubleshooting	3-1
Section III	Operator/Crew Maintenance Procedures	3-7

TABLE OF CONTENTS (cont)

		Page
CHAPTER 4	UNIT MAINTENANCE INSTRUCTIONS	
Section I	Repair Parts, Special Tools, TMDE, and Support Equipment	4-1
Section II	Service Upon Receipt	4-1
Section III	Unit Preventive Maintenance Checks and Services (PMCS)	4-2
Section IV	Unit Troubleshooting	4-10
Section V	Unit Maintenance Procedures	4-20
Section VI	Preparation for Storage or Shipment	4-113
APPENDIX A	REFERENCES	A-1
APPENDIX B	MAINTENANCE ALLOCATION CHART (MAC)	B-1
APPENDIX C	COMPONENTS OF END ITEM AND BASIC ISSUE ITEMS LIST	C-1
APPENDIX D	ADDITIONAL AUTHORIZATION LIST	D-1
APPENDIX E	EXPENDABLE/DURABLE SUPPLIES AND MATERIALS LIST	E-1
APPENDIX F	ILLUSTRATED LIST OF MANUFACTURED ITEMS	F-1
APPENDIX G	WIRING SCHEMATICS	G-1
INDEX		Index 1

CHAPTER 1

INTRODUCTION

Section I. GENERAL INFORMATION

1-1. SCOPE

MODEL NUMBER AND NAME: B-B-160/160-4GE747-A1, 80-ton diesel-electric locomotive.

PURPOSE OF EQUIPMENT: Used for yard switching or short line railway service. Can be used as a single unit or connected in multiple unit operation under one operator.

TYPE OF MANUAL: Operator and Unit Maintenance.

a. This manual is published for the use of personnel engaged in the operation, inspection, and maintenance of the 80-ton diesel-electric locomotive. It shall be used as a guide for regulations, standards, and procedures governing such work assignments.

b. Operation covers normal locomotive movement in usual and unusual conditions, inspections and precautions to be observed before, during, and after operations in order to avoid damage to the equipment or injury to personnel, and maintenance as it pertains to the locomotive operator's/ crew's responsibilities.

c. Maintenance portion of this manual provides guidance to unit level maintenance personnel. The purpose of each assembly, subassembly, and general overall locomotive maintenance procedure is given. Also included is a general troubleshooting guide to aid in inspection, removal, disassembly, cleaning, inspection, repair, assembly, and installation of components. General functions of the main features are given as an aid to provide a concise understanding of major and minor components.

1-2. MAINTENANCE FORMS, RECORDS, AND REPORTS

Department of the Army forms and procedures used for equipment maintenance will be those prescribed by DA PAM 738-750, The Army Maintenance Management System (TAMMS).

1-3. DESTRUCTION OF ARMY MATERIEL TO PREVENT ENEMY USE

Refer to TM 750-244-3, Procedures for Destruction of Equipment to Prevent Enemy Use, for information and instructions covering destruction of Army materiel.

1-4. PREPARATION FOR STORAGE OR SHIPMENT

Refer to chapter 4, section VI, for information pertaining to preparation for storage or shipment.

1-5. QUALITY ASSURANCE/QUALITY CONTROL (QA/QC)

a. The daily and 92-day maintenance inspection will be performed by the using organization's qualified maintenance personnel.

b. Refer to DD Form 862, Daily Inspection Worksheet for Diesel-Electric Locomotives, for unit maintenance and inspection checklist required of the using organization. Records of the above form shall be retained for a period of 1 year.

c. Refer to Federal Railroad Administration (FRA) Form 6180-49A to document 92-day Locomotive Inspection and Repair Record in accordance with Locomotive Inspection Act, 36 State, 913. The form must be completed and signed by the personnel conducting the inspection. The completed form shall be placed in the card holder in the locomotive cab. A copy shall be retained for a period of 2 years. Refer to TB 55-2200-207-15/1, Inspection and Maintenance Checklist for Diesel-Electric Locomotive, for unit maintenance's 92-day inspection of the locomotive. The checklist and DA Form 2407, Maintenance Request, will be used as prescribed in DA PAM 738-750. d. Intermediate direct support and intermediate general support maintenance tasks should not be performed by unit maintenance personnel. If intermediate direct support and intermediate general support maintenance should be required before normally scheduled, contact: Commander, US Army Troop Support Command, ATTN: AMSTR-MCFR, 4300 Goodfellow Blvd., St. Louis, MO 63120-1798, AUTOVON: 693-0747.

1-6. REPORTING EQUIPMENT IMPROVEMENT RECOMMENDATIONS (EIR)

If your locomotive needs improvement, let us know. Send us an EIR. You, the user, are the only one who can tell us what you do not like about your equipment. Let us know why you do not like the design or performance. Tell us why a procedure is hard to perform. Put it on an SF 368 (Quality Deficiency Report). Mail it to: Commander, US Army Troop Support Command, ATTN: AMSTR-QX, 4300 Goodfellow Blvd., St. Louis, MO 63120-1798. We'll send you a reply.

1-7. WARRANTY INFORMATION.

a. The NTA-855-L4 diesel engine is warranted by Cummins Engine Company for 12 months or 1000 hours of operation, whichever comes first. Warranty starts on the date found on DA Form 2408, Equipment Log Assembly, or DA Form 2410, Component Removal and Repair/Overhaul Record, in the logbook.

b. The AVLALBBF99999 Air Compressor is warranted for 1 year from the date of receipt of the warranty card by the Gardner Denver Division of Cooper Industries. Upon receipt of the locomotive, the warranty card must be properly filled out and sent to the manufacturer. Report defects in material or workmanship to your supervisor, who will take appropriate action.

Section II. EQUIPMENT DESCRIPTION AND DATA

1-8. EQUIPMENT CHARACTERISTICS, CAPABILITIES, AND FEATURES

CHARACTERISTICS

An eight-wheel, four-traction motor driven, 80-ton diesel-electric locomotive. Description of major components and systems is also listed in the applicable maintenance paragraphs in TM 55-2210-224-34, Intermediate Direct Support and Intermediate General Support Maintenance Manual.

CAPABILITIES

Used as a yard switching locomotive or for short-line railway service and includes features listed below. Can also be operated as a single unit or connected with other units of the same type for multiple unit operation.

FEATURES

Include the following:

Diesel engines

Main generators

Battery charging alternators

Traction motors

Air compressors

Airbrake system

Sanding system

1-9. LOCATION AND DESCRIPTION OF MAJOR COMPONENTS

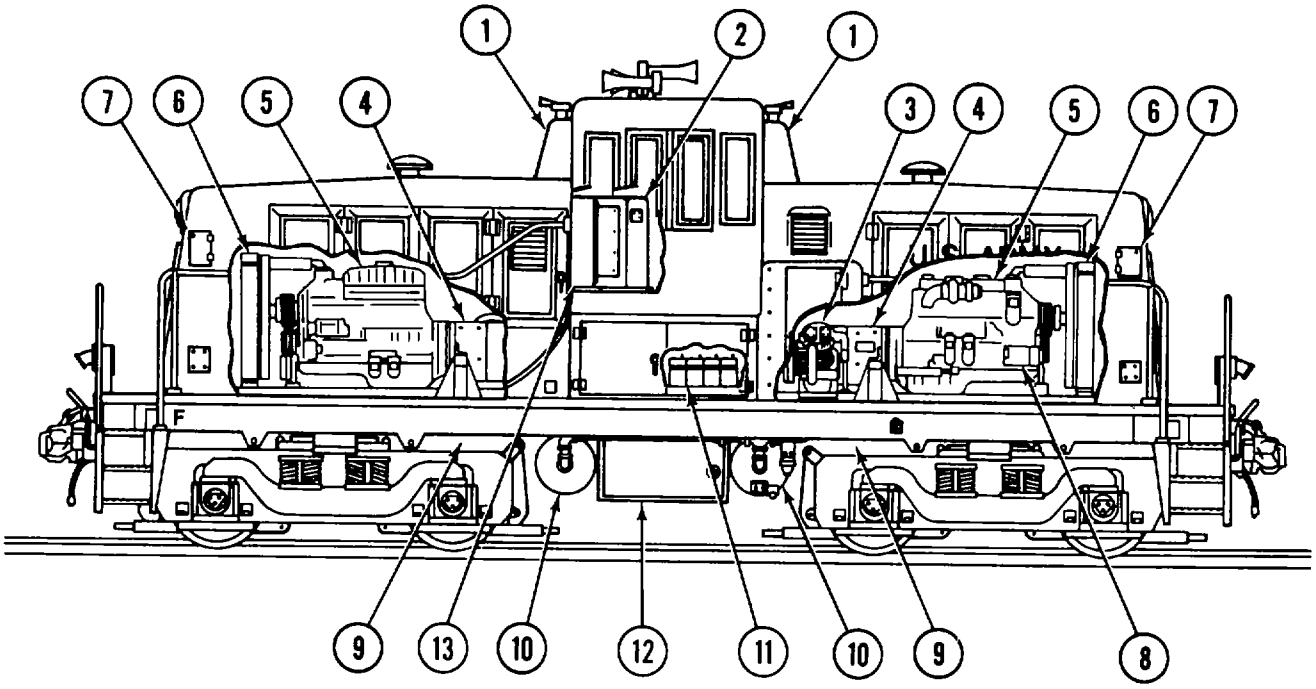

FIGURE 1-1. Major components - location.

(1) TAILPIPE HOUSINGS. Provide a means of supporting the tailpipe.

(2) MASTER CONTROLLER. Contains the throttle, reverser, brake controls, and other controls and indicators used by operator to operate and monitor the locomotive and is located in the cab of the locomotive.

(3) AIR COMPRESSORS. The two air compressors are compound, V-type, two-cylinder compressors and are belt driven by pulleys mounted on the armature shafts of the main generators.

(4) MAIN GENERATORS. Two main generators furnish direct-current power over a wide range of voltage at various speeds up to 2100 rpm and are self excited. The generators also act as starting motors when the start buttons are pushed and the battery switch is closed.

(5) DIESEL ENGINES. Two six-cylinder, in-line, turbocharged, water-cooled, four-cycle engines provide power. They are directly connected to the two main generators.

1-9. LOCATION AND DESCRIPTION OF MAJOR COMPONENTS (cont)

(6) ENGINE RADIATORS. Two radiators, one for each engine, keep engines at proper operating temperature.

(7) SANDBOXES AND SAND CONTROLLERS. There are four sandboxes and sand controllers, one for each front and rear wheel. The sand controllers are mounted underneath the sandboxes and deliver a metered amount of sand to the front or rear driving wheels. The sand controller is controlled by the sander control valve.

(8) BATTERY CHARGING ALTERNATORS. Two 32-volt, 60-amp, internally regulated alternators, one on each engine, provide power for charging the batteries and operating low-voltage lights and controls.

(9) TRACTION MOTORS. Four traction motors and gear boxes are axle hung and supported on the truck transoms by a suspension pad assembly. One motor is geared to each axle through a double gear reduction with a final ratio of 14.96: 1.

(10) MAIN RESERVOIR AIR TANKS. Two main reservoir tanks, to the front and rear of the fuel tank, provide a means of storing air for the air system.

(11) BATTERY COMPARTMENT. The battery compartment is located beneath the cab, directly beneath the fireman's seat, and contains four batteries used for starting the engines.

(12) FUEL TANK. The fuel tank can hold 400 gallons (1 514 liters) of diesel fuel for engine operation. Two fill pipes and two fuel level gages, one on each side of the locomotive, provide a means of filling the tank and monitoring the level of fuel.

(13) ELECTRICAL EQUIPMENT CABINET. Contains the automatic switching relays and contactors and is located in the cab of the locomotive. Both high and low voltage are present in the electrical equipment cabinet when the locomotive is in operation.

1-10. EQUIPMENT DATA

a. Data Plates.

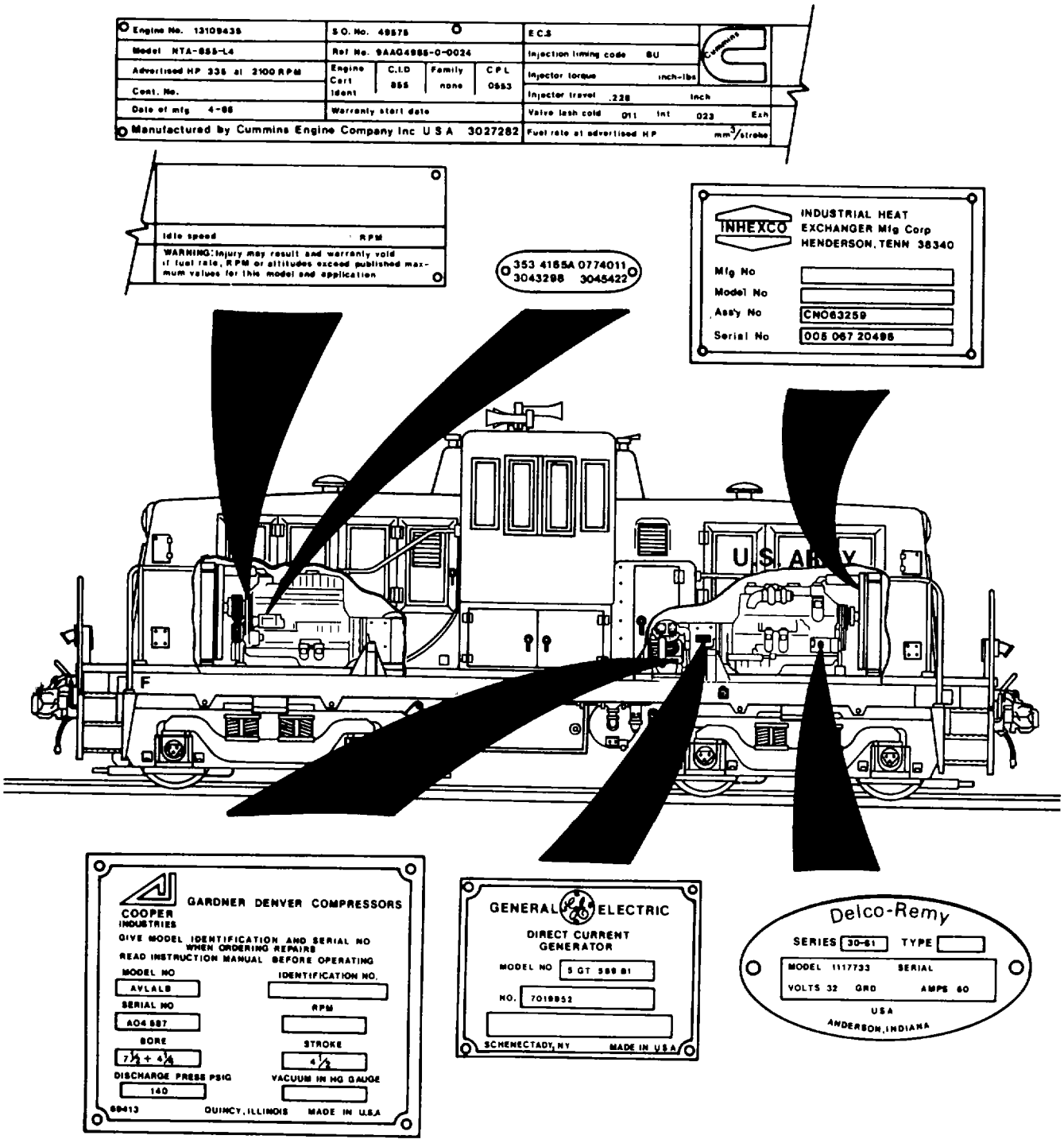

FIGURE 1-2. Data plates - location. (sheet 1 of 3)

1-10. EQUIPMENT DATA (cont)

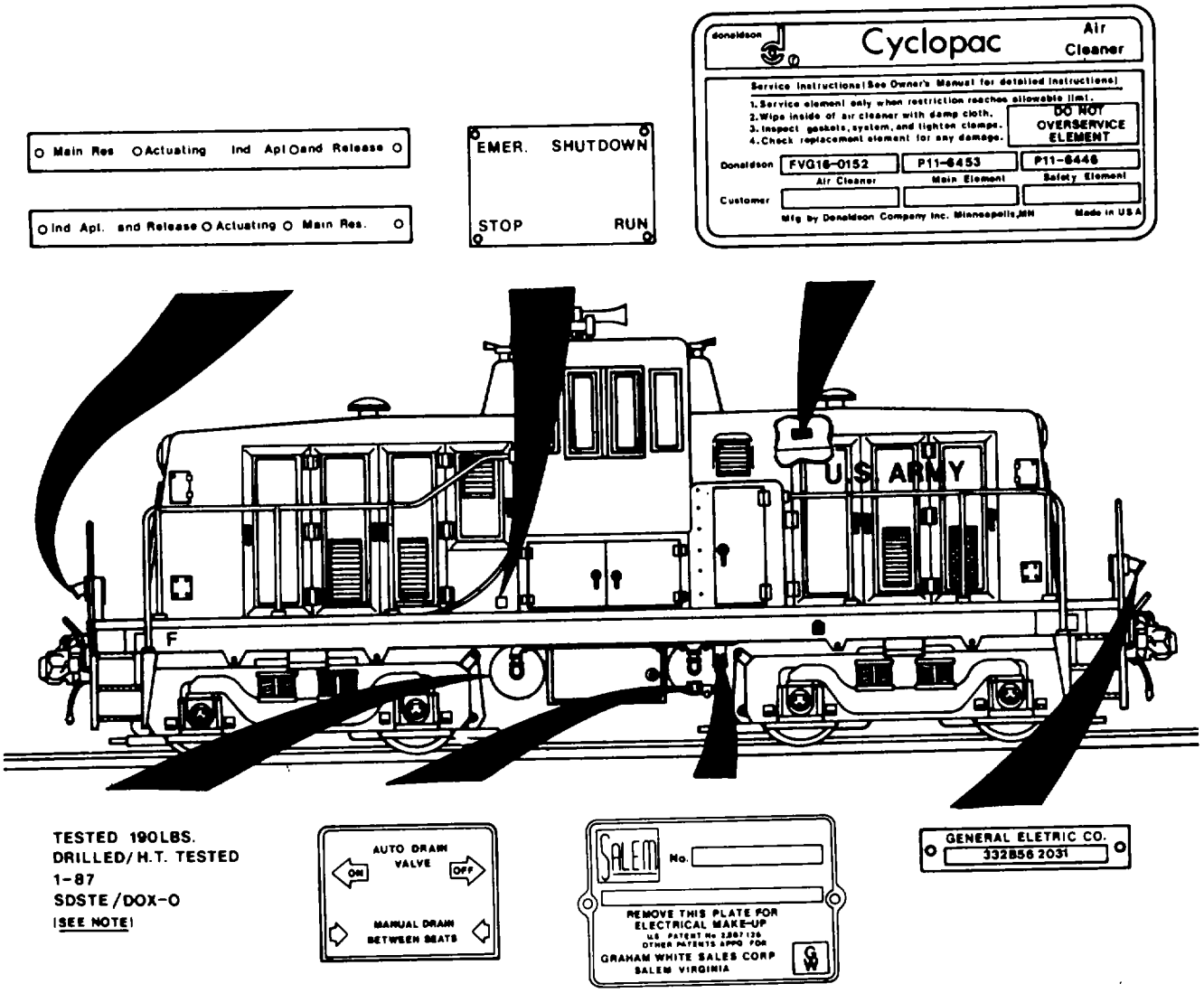

FIGURE 1-2. Data plates - location. (sheet 2 of 3)

1-10. EQUIPMENT DATA (cont)

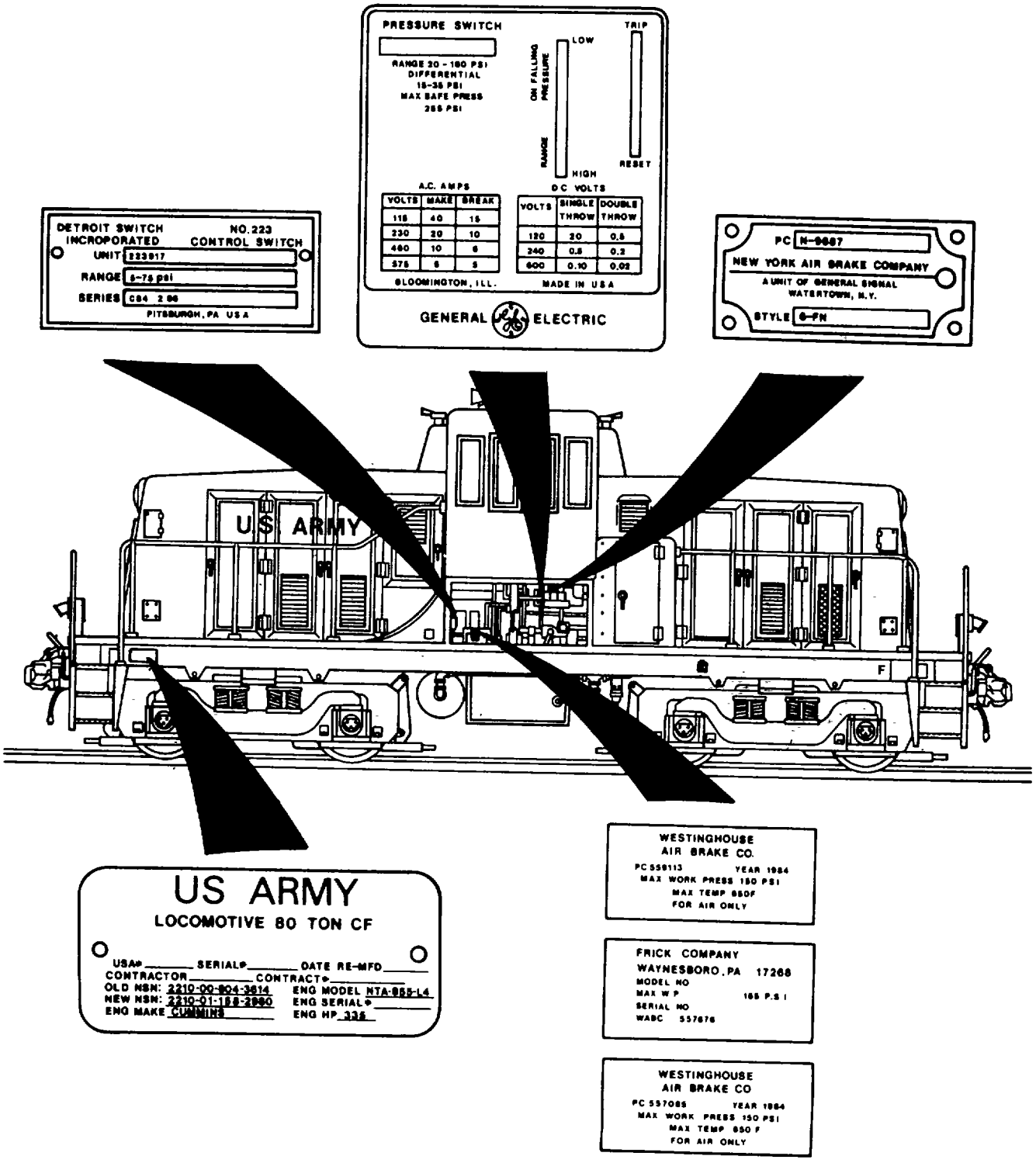

FIGURE 1-2. Data plates - location. (sheet 3 of 3)

1-10. EQUIPMENT DATA (cont)

b. Tabulated Data.

(1) Locomotive.

(a) General.

Manufacturer	General Electric Company
Model	B-B-160/160-4GE747-A1
Minimum Curve Radius	75 ft (22.9 m)
Wheel Base	
Each Truck (Rigid)	6 ft 10 in. (2.1 m)
Between Truck Centers	19 ft 2 in. (5.8 m)
Wheel Diameter	33 in. (838 mm)
Journal Size	6 in. x 11 in. (152,.4 mm x 279.4 mm)
Number of Traction Motors	4
Brake Equipment (NYAB)	Standard 26-NL

(b) Performance.

Horsepower	670 BHP (499.8 kW) total, both engines
Maximum Speed	40 mph (64.4 km)
Gear Ratio	14.96:1

(c) Capacities.

Diesel Fuel	400 gal. (1 514 liters)
Lubricating Oil	10.5 gal. (39.7 liters) each engine
Cooling System	25.5 gal. (96.5 liters) each engine
Sandbox	10 cu ft (0.283 cu m) each box
Air Compressor Crankcase	6 qt (5.7 liters) each compressor

(d) Clearance Dimensions.

Height	13 ft 6.75 in. (4.13 m)
Width	9 ft 6 in. (2.9 m)
Length Inside Knuckles	
(Type E)	36 ft 10 in. (11.23 m)

(e) Approximate Weights.

Locomotive	160,000 lb (72 576.0 kg)
Four-Wheel Truck With Motor	24,000 lb (10 886.40 kg)
Traction Motor With Gears	2,930 lb (1 329.04 kg)
Radiator	335 lb (151.96 kg)
Air Compressor.	530 lb (240.41 kg)
Diesel Engine	2770 lb (1 256.47 kg)
Main Generator	2400 lb (1 088.64 kg)
Battery Charging Alternator	56 lb (25.40 kg)

1-10. EQUIPMENT DATA (cont)

(2) Diesel Engine.

Manufacturer	Cummins Engine Co., Inc.
Type	NTA 855-L4
Number of Cylinders	6
Bore and Stroke	5.5 in. x 6 in. (139.7 mm x 152.4 mm)
Displacement	855 cu in. (14 L)
Firing Order	1-5-3-6-2-4
Governed Speed	2100 rpm
Rotation (viewed from flywheel)	Counterclockwise
Brake Horsepower	335 BHP (2.50 kW)
Fuel	Diesel oil
Fuel System	Direct injection
Cooling System	Liquid (centrifugal pump)
Starting System	Battery
Lubricating System	Pressure feed

(3) Main Generator.

Manufacturer	General Electric Co.
Model	5GT 569B1
Voltage	170 to 385 dc
Capacity	350 kW
Speed (safe maximum rpm)	2100 rpm

(4) Battery Charging Alternator.

Manufacturer	Delco Remy Co.
Model	1117733
Voltage	32 V dc
Amps	60 amp

(5) Traction Motor.

Manufacturer	General Electric
Type	5GE747D2
Voltage	250 V dc
Amperes	550 amp
Gear Ratio	14.96:1
Safe rpm	4650 rpm

(6) Air Compressor.

Manufacturer	Gardner Denver Co.
Model	AVLALBBF99999
Bore 1st Stage	7.50 in. (190.5 mm)
Bore 2nd Stage	4.25 in. [107.9 mm)
Stroke	4.50 in. (114.3 mm)
Displacement	50 cfm (1.42 cu m) at 900 rpm

1-11. SAFETY, CARE, AND HANDLING

When operating or doing maintenance on the locomotive, be guided by fundamental rules of safety and good shop practices. Take necessary precautions to ensure the safety of others as well as yourself. Take special note of the following:

a. Read and understand all cautions and warnings throughout this manual.

b. Avoid careless operating habits which cause accidents to personnel and damage to equipment.

c. Maintain a clean and safe work area in and around the locomotive.

d. Always wear protective earplugs, glasses, shoes, and clothing as required when operating or working on the locomotive.

e. If the diesel engine must be started to perform checks, be sure all guards and shields are installed.

f. Open battery switch and discharge any capacitors before starting any repair work. Hang DO NOT OPERATE sign on the operator controller.

g. Do not work under locomotive or any components that are supported only by lifting jacks or hoist. Use stands or blocking.

h. Relieve pressure in air, oil, or water systems before removing any lines, fittings, or related items.

i. Use a suitable lifting device or get help when lifting components that weigh 50 lb (22.68 kg) or more. Make sure cables, chains, hooks, slings, etc., are in good condition and are of the correct capacity.

j. When locomotive is idling and no one is aboard, reverser handle should be removed to prevent unauthorized personnel from moving locomotive.

Section III. TECHNICAL PRINCIPLES OF OPERATION

1-12. GENERATING EQUIPMENT AND CONTROL DEVICES

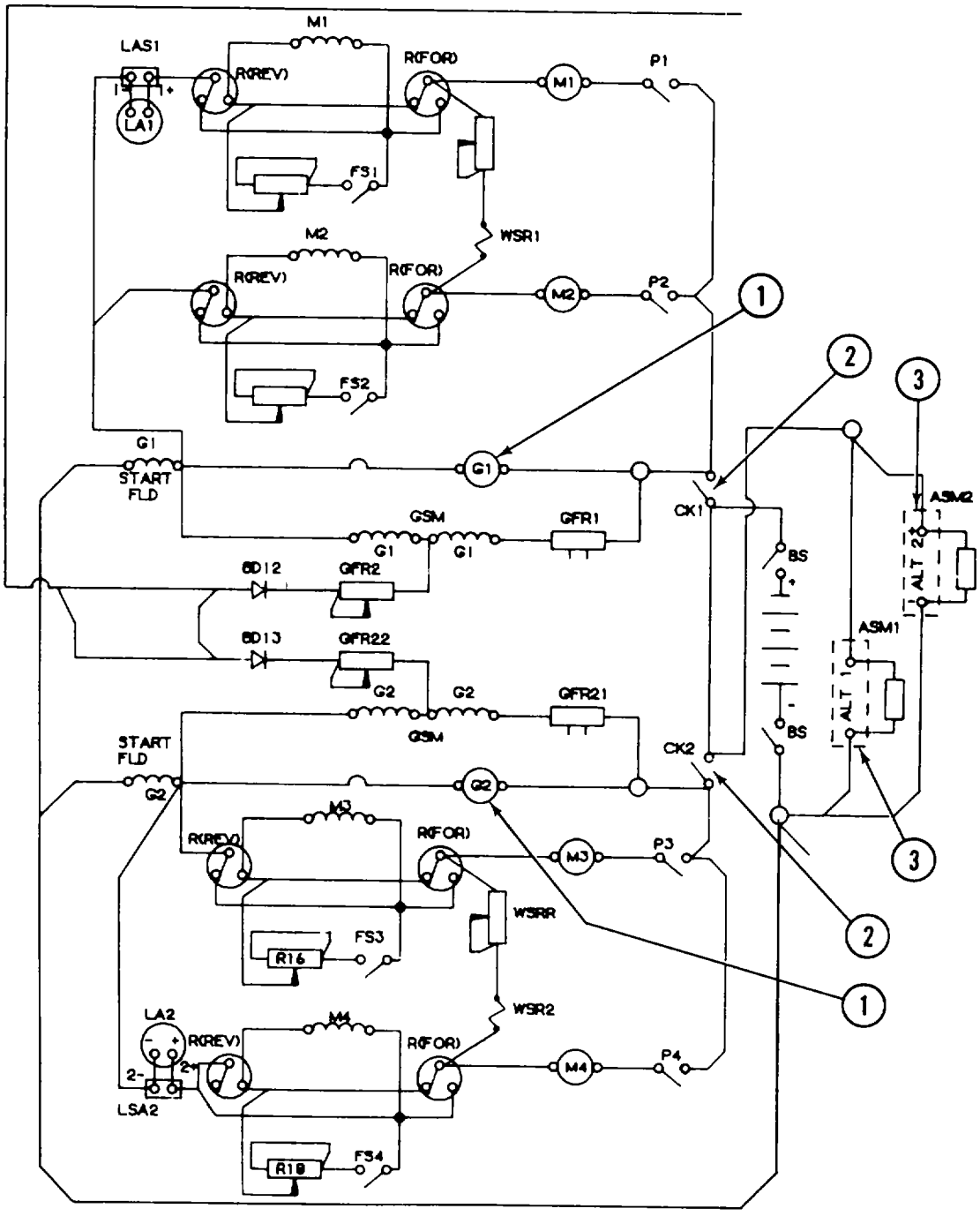

1-12. GENERATING EQUIPMENT AND CONTROL DEVICES (cont)

1 MAIN GENERATORS. Furnish dc power to operate the traction motors and also serve as series-wound starting motors, operating from low battery voltage, to start the diesel engines.

2 ENGINE CRANKING CONTACTORS. Connects the battery to either main generator and its starting field, when operating the generator as a starting motor.

3 BATTERY CHARGING ALTERNATORS. There are two auxiliary alternators, one mounted on each engine, which provide current to charge the storage batteries and to operate electrical auxiliaries. The alternators are internally regulated.

1-13. TRACTION MOTORS AND SWITCHING DEVICES

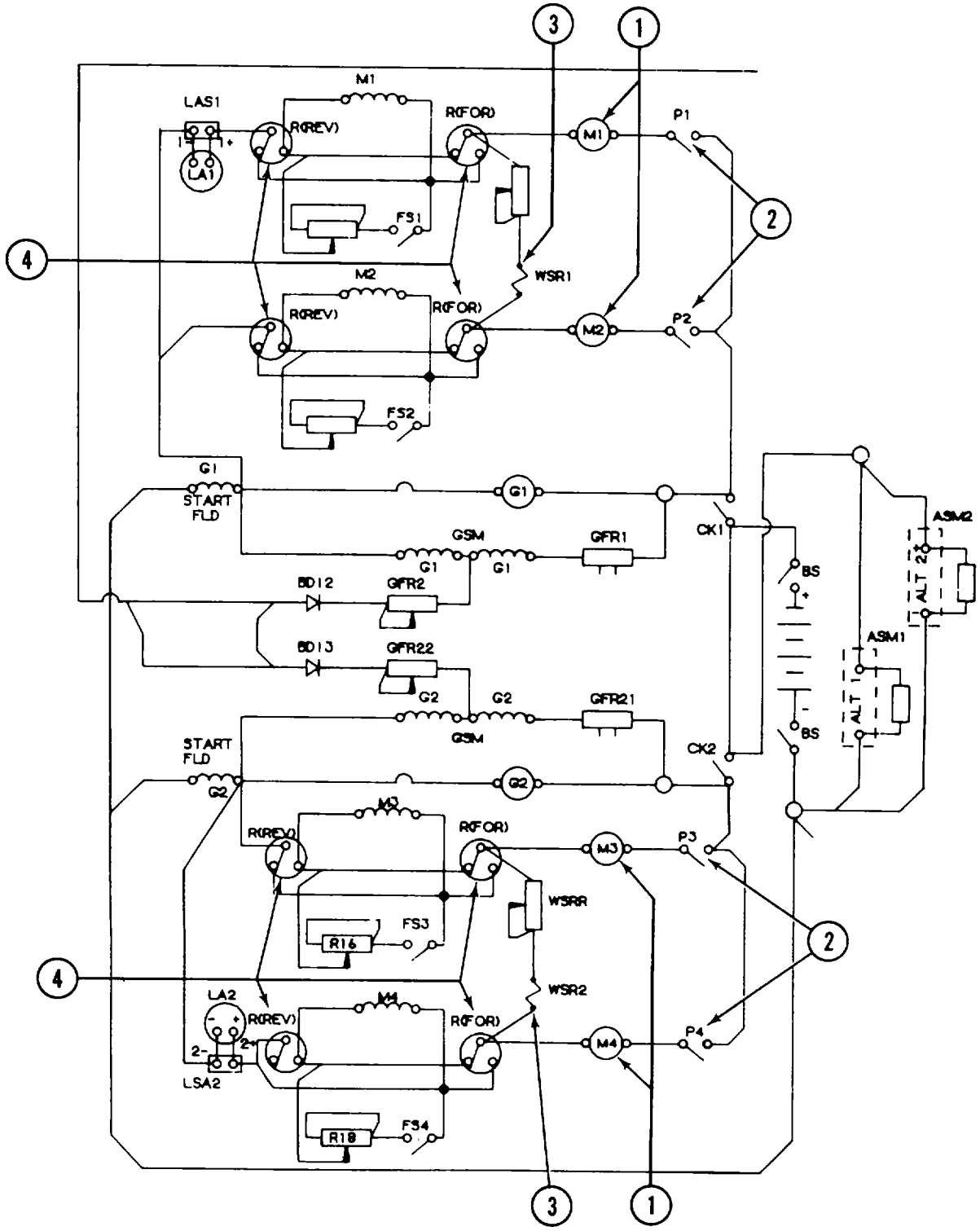

1-13. TRACTION MOTORS AND SWITCHING DEVICES (cont)

1 TRACTION MOTORS (M1, M2, M3, AND M4). The traction motors are direct current series type. The unit is supported by motor supports on the motor ends and the axle bearings at the gearbox end. Each motor is connected to its axle through a set of double reduction gears.

2 POWER CONTACTORS (P1, P2, P3, AND P4). Connect the traction motors, in parallel combination, to the main generators. The power contactors connect and interrupt the dc current. The power contactors carry both low-voltage current for the interlock circuits and high-voltage current for the traction motors.

3 WHEEL SLIP RELAYS (WSR1 AND WSR2). When a pair of wheels slips, relay WSR1 or WSR2 is energized, turning on the wheel slip indicator light. WSR1 is connected to the front set of wheels, and WSR2 is connected to the rear set of wheels.

4 REVERSER. The reverser controls the direction of the traction motors for forward or reverse motion of the locomotive by changing the direction the current flows through the traction motor fields. The reverser is controlled by the reverser handle on the control console. Moving the handle in the desired direction energizes one of two reverser coils, which directs air pressure to pneumatic cylinders. The pneumatic cylinders instantly switch the reverser contacts to the desired direction mode.

1-14. MISCELLANEOUS CONTROL DEVICES

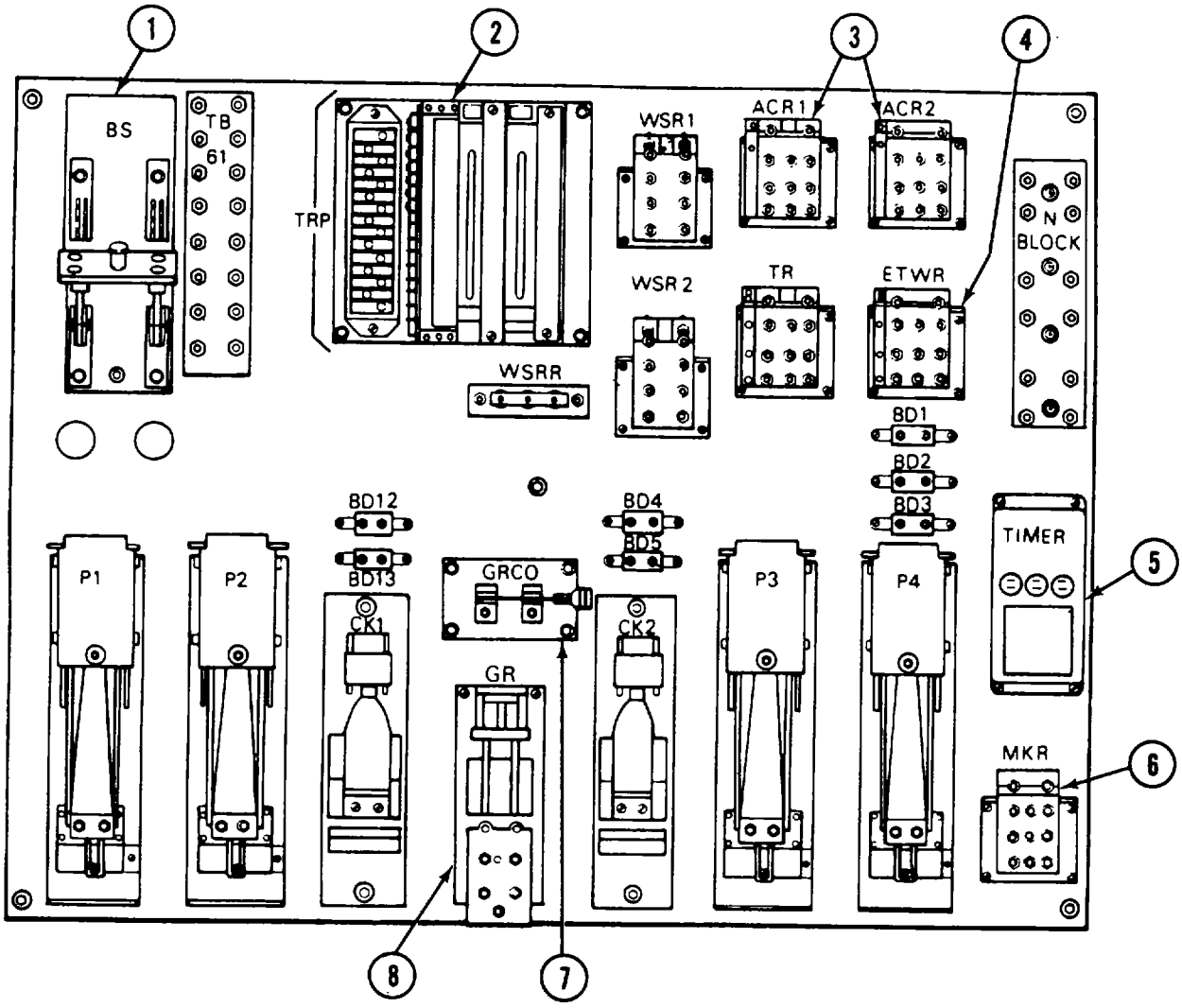

1 BATTERY SWITCH (BS). Battery switch provides protection to the battery. It must be closed during operating periods and opened when the locomotive is shut down to disconnect the battery from the electric circuits.

2 TRANSITION RELAY PANEL. Electronically actuates relays which place field shunt resistors in parallel with the traction motors at a predetermined speed.

3 SAFETY RELAYS (ACR1 AND ACR2). The safety relays shut down the engine if a problem develops with the locomotive which would cause damage or create a safety hazard, such as loss of air or oil pressure.

1-14. MISCELLANEOUS CONTROL DEVICES (cont)

4 ENGINE TEMPERATURE WARNING RELAY (ETWR). If temperature of the engine becomes excessive, a buzzer will sound. If temperature continues to rise, safety circuits will cut off power to the traction motors which are powered by the engine that is overheating.

5 TIMER. This timing device cycles the four electric drain valves. There is one valve on the bottom of each of the main reservoir air tanks and one each on top of the main reservoir air filter and the secondary air filter. When input power is applied to the timer, a timing cycle will cause a short and long blast of air at the drain valves every 3 minutes.

6 MOTOR KILL RELAY (MKR). Shuts down all engines in a multiple unit when the throttle is placed in the STOP position.

7 GROUND RELAY CUTOUT SWITCH (GRCO). A single-pole, single-throw knife switch which can be opened to disconnect the ground relay circuits.

8 GROUND RELAY (GR). The ground relay is provided to detect grounding that develops between the traction motor power circuits and the locomotive frame. When current flows through the ground relay trip coil, it activates the relay which locks in the energized position. This action lights the ground warning light and returns the diesel engines to idle speed. The relay can be reset by moving the throttle to IDLE and pressing the GROUND RESET button.

CHAPTER 2

OPERATING INSTRUCTIONS

Section I. DESCRIPTION AND USE OF OPERATOR CONTROLS AND INDICATORS

2-1. INTRODUCTION

This section shows the location and describes the use of controls and indicators you will use in operating your diesel-electric locomotive.

2-2. LOCATION AND USE OF CONTROLS AND INDICATORS

You should know the location and proper use of every control and indicator before operating your locomotive. Use this section to learn or refresh your memory about each control and indicator you will use. The following pages illustrate and describe the controls and indicators. TM 5-2815-233-14, Operator, Unit, Intermediate Direct Support, and Intermediate General Support Maintenance Manual, illustrates and describes the controls on the diesel engine.

2-3. OPERATOR CONTROLS AND INDICATORS

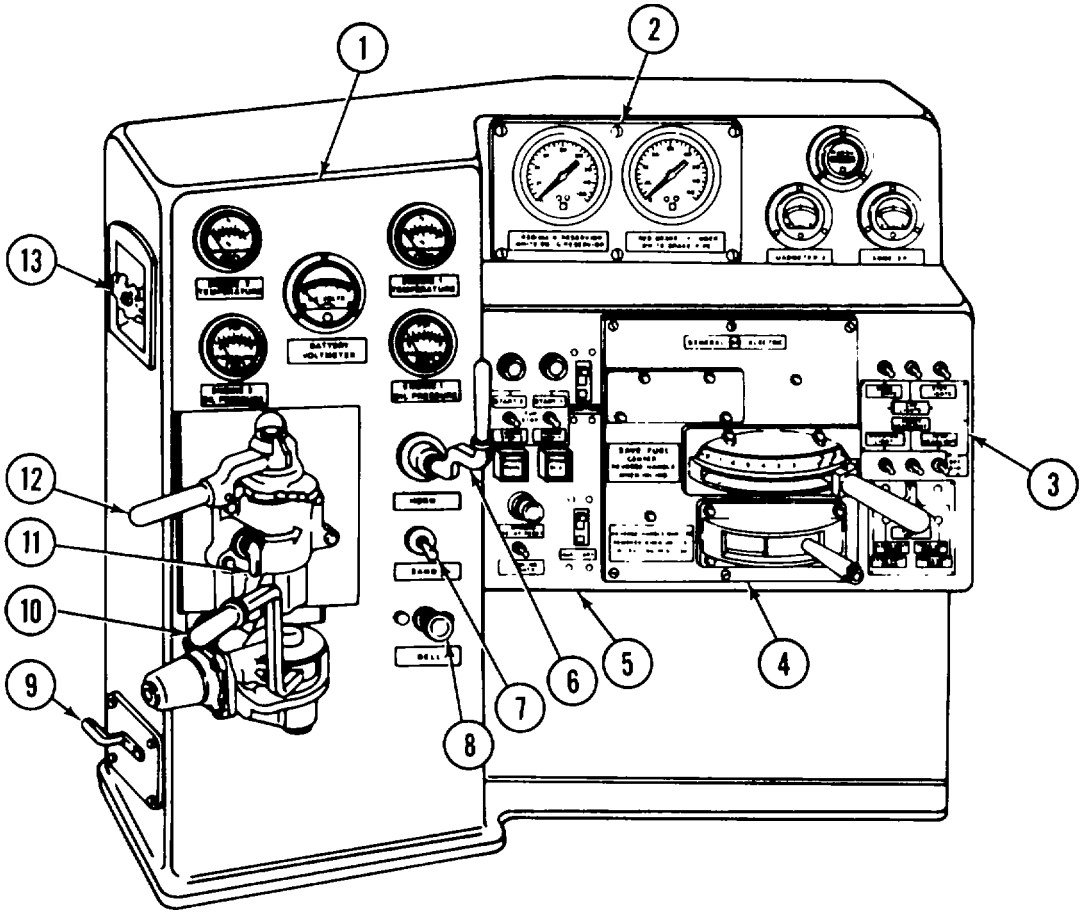

FIGURE 2-1. Master controller.

Key	Control or Indicator	Function or Use
(1)	Meter Panel	Contains the battery voltmeter and engine oil pressure and temperature gages. See FIGURE 2-2.
(2)	Gage Panel	Contains the air gages and load meter. See FIGURE 2-3.
(3)	Lighting Switch Panel	Contains switches for gage lights, step lights, cab lights, warning light, front and rear headlights, and multiple-unit lighting setup. See FIGURE 2-4.

2-3. OPERATOR CONTROLS AND INDICATORS (cont)

Key	Control or Indicator	Function or Use
(4)	Controller Mechanism	Contains the throttle and reverser. See FIGURE 2-5.
(5)	Engine Control Panel	Contains start switches, stop buttons, ground and wheel slip warning lights, ground reset button, and cowling light switch. See FIGURE 2-6.
(6)	HORN Valve	When pulled, sounds the warning horn and the warning bell.
(7)	SAND Valve Control	When pushed, applies sand in front of the driving wheels in the direction the locomotive is moving.
(8)	BELL Ringer Valve	When pushed, rings the warning bell.
(9)	Double-Ported Cutout Cock	Is positioned to correspond to the operating mode of the locomotive. It has two positions: OPEN (Lead or Dead) and CLOSED (Trail).
(10)	Independent Brake Valve	Used to apply and release the locomotive brake. By depressing the independent handle, a release of the automatic brake application can be made on the locomotive without releasing the train brake.
(11)	Cutoff Pilot Valve	Used for cutting in or cutting out the charging (Double Heading Cock) of brake pipe. On trailing units and when measuring brake pipe leakage, the valve is in the OUT position.
(12)	Automatic Brake Valve	Used to apply and release the automatic brakes on the locomotive and train.
(13)	Regulating Valve Handle	Used to adjust the equalizing reservoir pressure when automatic brake valve is in RELEASE.

2-3. OPERATOR CONTROLS AND INDICATORS (cont)

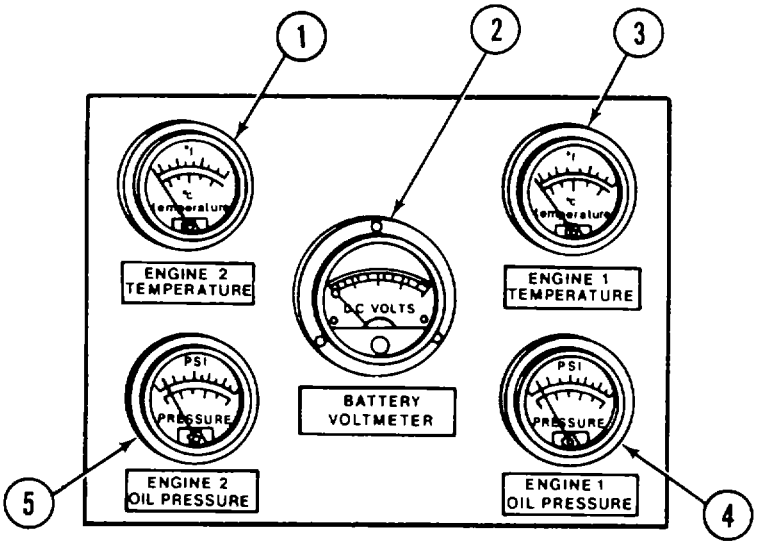

FIGURE 2-2. Meter panel.

Key	Control or Indicator	Function or Use
(1)	ENGINE 2 TEMPERATURE Gage	Indicates the temperature of No. 2 engine.
(2)	BATTERY VOLTMETER Gage	Indicates condition of batteries and charging system.
(3)	ENGINE 1 TEMPERATURE Gage	Indicates the temperature of No. 1 engine.
(4)	ENGINE 1 OIL PRESSURE Gage	Indicates the lube oil pressure in No. 1 engine.
(5)	ENGINE 2 OIL PRESSURE Gage	Indicates the lube oil pressure in No. 2 engine.

2-3. OPERATOR CONTROLS AND INDICATORS (cont)

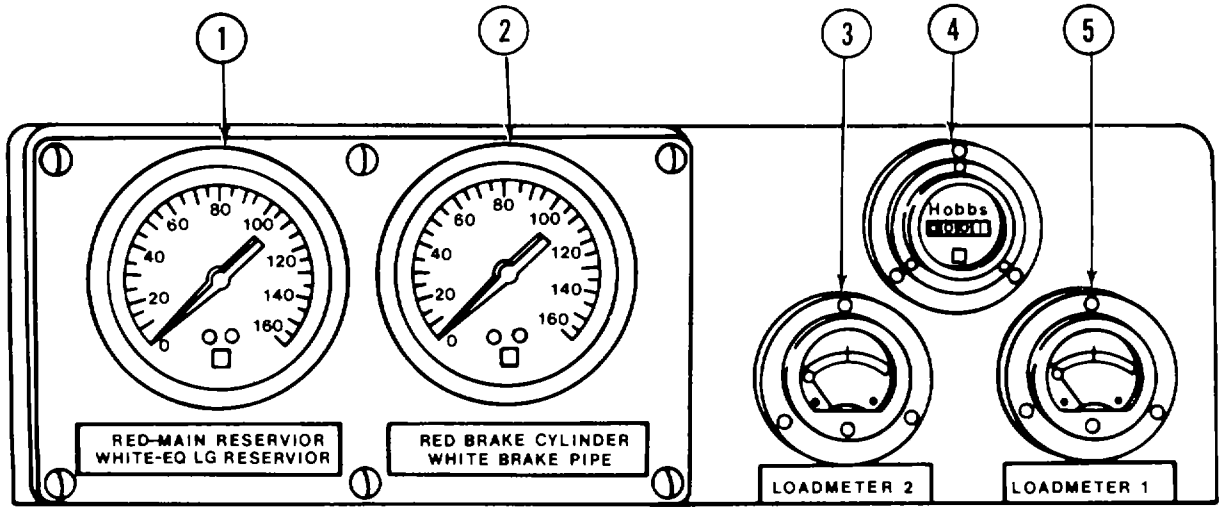

FIGURE 2-3. Gage panel.

Key	Control or Indicator	Function or Use
(1)	RED-MAIN RESERVOIR and WHITE-EQ'LG RESERVOIR Duplex Air Gage	Indicates the main reservoir and equalizing reservoir air pressures.
(2)	RED-BRAKE CYLINDER and WHITE-BRAKE PIPE Pressure Duplex Air Gage	Indicates the brake cylinder and brake pipe air pressures.
(3)	LOAD METER 2 Indicator	Indicates the output of main generator No. 2. Indicates the current through traction motors 3 and 4.
(4)	SERVICE METER	Indicates total operating time of locomotive.
(5)	LOAD METER 1 Indicator	Indicates the output of main generator No. 1. Indicates the current through traction motors 1and 2.

2-3. OPERATOR CONTROLS AND INDICATORS (cont)

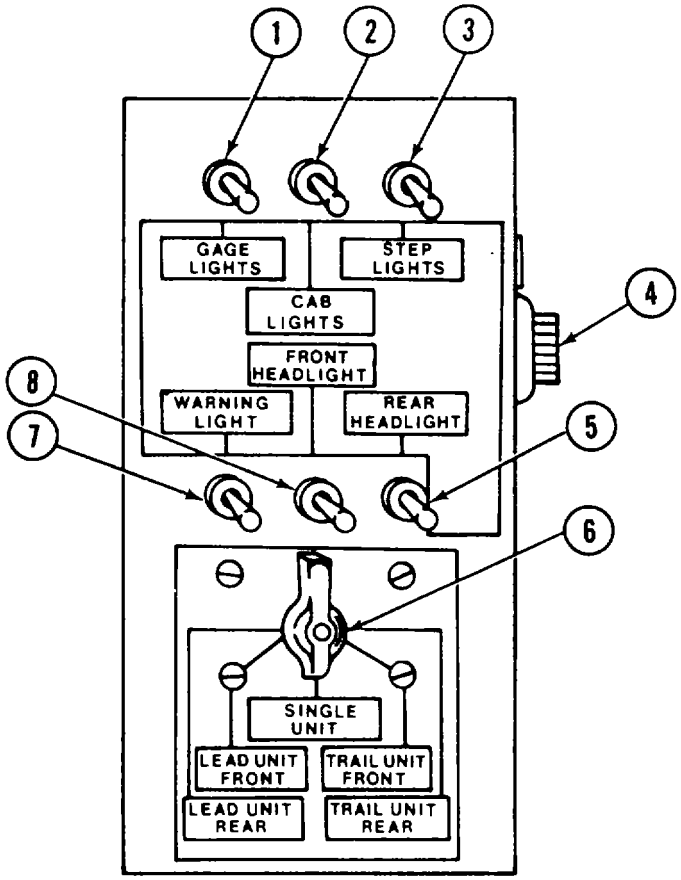

FIGURE 2-4. Light Switch Panel.

Key	Control or Indicator	Function or Use
(1)	GAGE LIGHTS Switch	Turns gage lights ON or OFF.
(2)	CAB LIGHTS Switch	Turns cab lights ON or OFF.
(3)	STEP LIGHTS Switch	Turns step lights ON or OFF.
(4)	GAGE LIGHT Rheostat	Controls brightness of gage lights.
(5)	REAR HEADLIGHT Switch	Turns rear headlight BRIGHT, DIM, or OFF.
(6)	MU HEADLIGHT SETUP Switch	Controls operation of headlights for multiple-unit or single-unit operation.
(7)	WARNING LIGHT Switch	Turns WARNING light ON or OFF.
(8)	FRONT HEADLIGHT Switch	Turns front headlight BRIGHT, DIM, or OFF.

2-3. OPERATOR CONTROLS AND INDICATORS (cont)

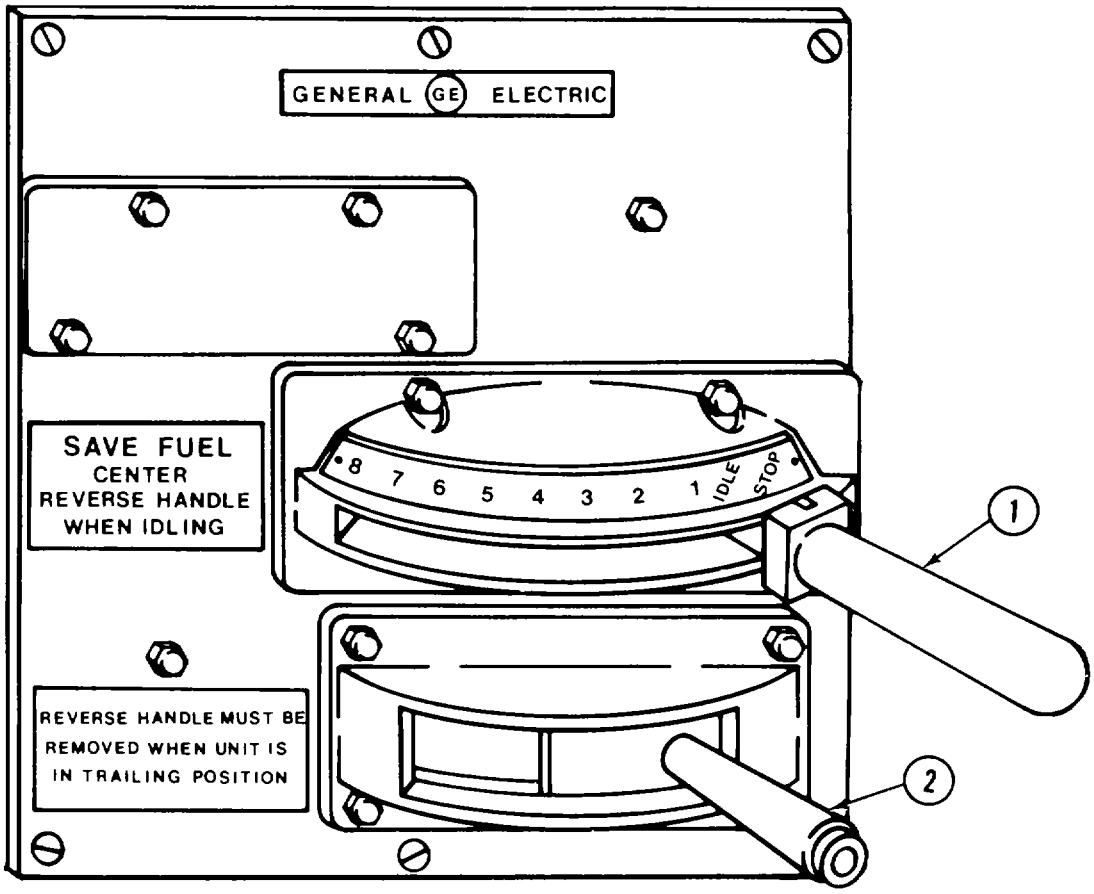

FIGURE 2-5. Controller mechanism.

Key	Control or Indicator	Function or Use
(1)	THROTTLE Handle	Used to control the speed of the locomotive.
(2)	REVERSER Handle	Used to control the direction the locomotive moves.

2-3. OPERATOR CONTROLS AND INDICATORS (cont)

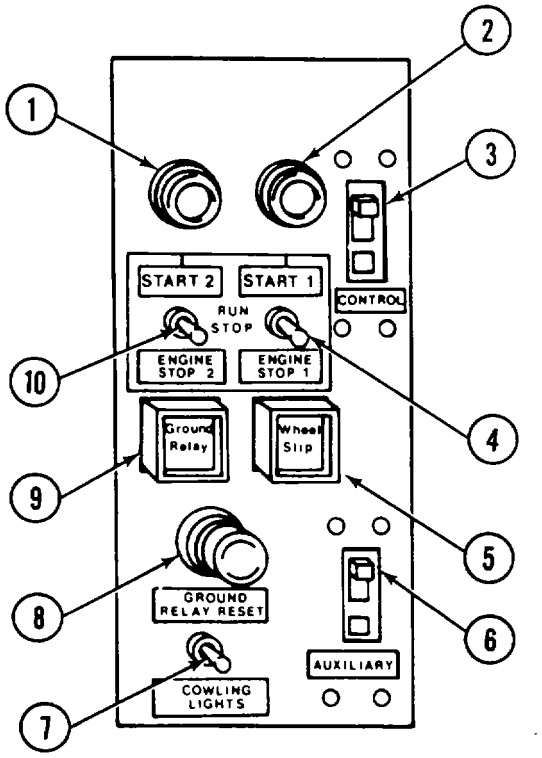

FIGURE 2-6. Engine control panel.

Key	Control or Indicator	Function or Use
(1)	ENGINE START 2 Pushbutton	Push to start No. 2 engine.
(2)	ENGINE START 1 Pushbutton	Push to start No. 1 engine.
(3)	CONTROL Circuit Breaker	Prevents overloading of locomotive control electrical system.
(4)	ENGINE STOP 1 Switch	Stops No. 1 engine. Must be in RUN position to start engine.
(5)	WHEEL SLIP Light	Indicates when one or more pairs of wheels are slipping.
(6)	AUXILIARY Circuit Breaker	Prevents overloading of auxiliary electrical system.
(7)	COWLING LIGHTS Switch	Turns cowling lights inside of engine compartment ON or OFF.
(8)	GROUND RELAY RESET	Push to reset ground relay.
(9)	GROUND RELAY Light	Indicates a ground or a current passing through the frame or body.
(10)	ENGINE STOP 2 Switch	Stops No. 2 engine. Must be in RUN position to start engine.

2-3. OPERATOR CONTROLS AND INDICATORS (cont)

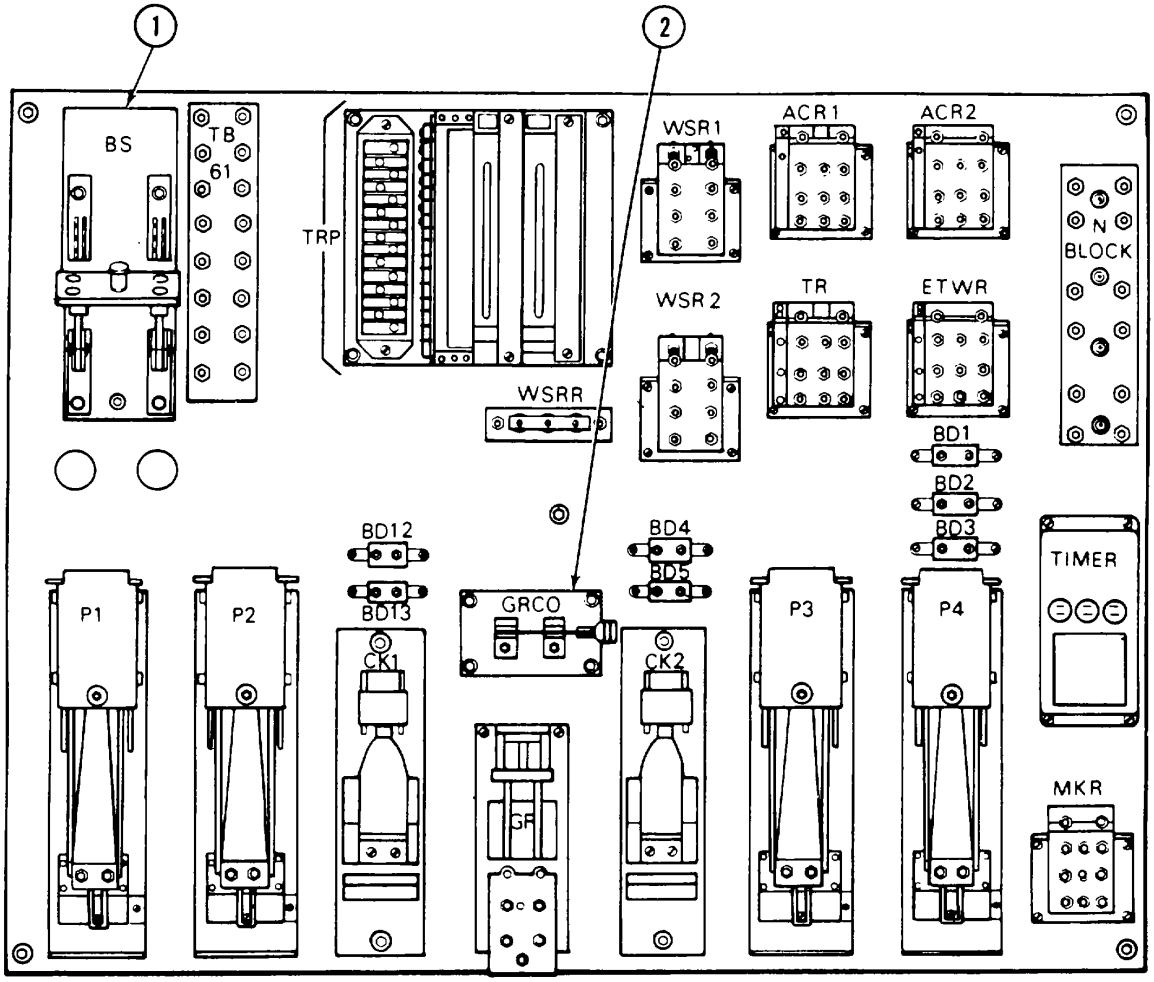

FIGURE 2-7. Electrical equipment cabinet.

Key	Control or Indicator	Function or Use
(1)	BS Switch	When open, disconnects the battery from all electrical circuits.
(2)	GRCO switch	Disables ground cutout relay when switch is open.

2-3. OPERATOR CONTROLS AND INDICATORS (cont)

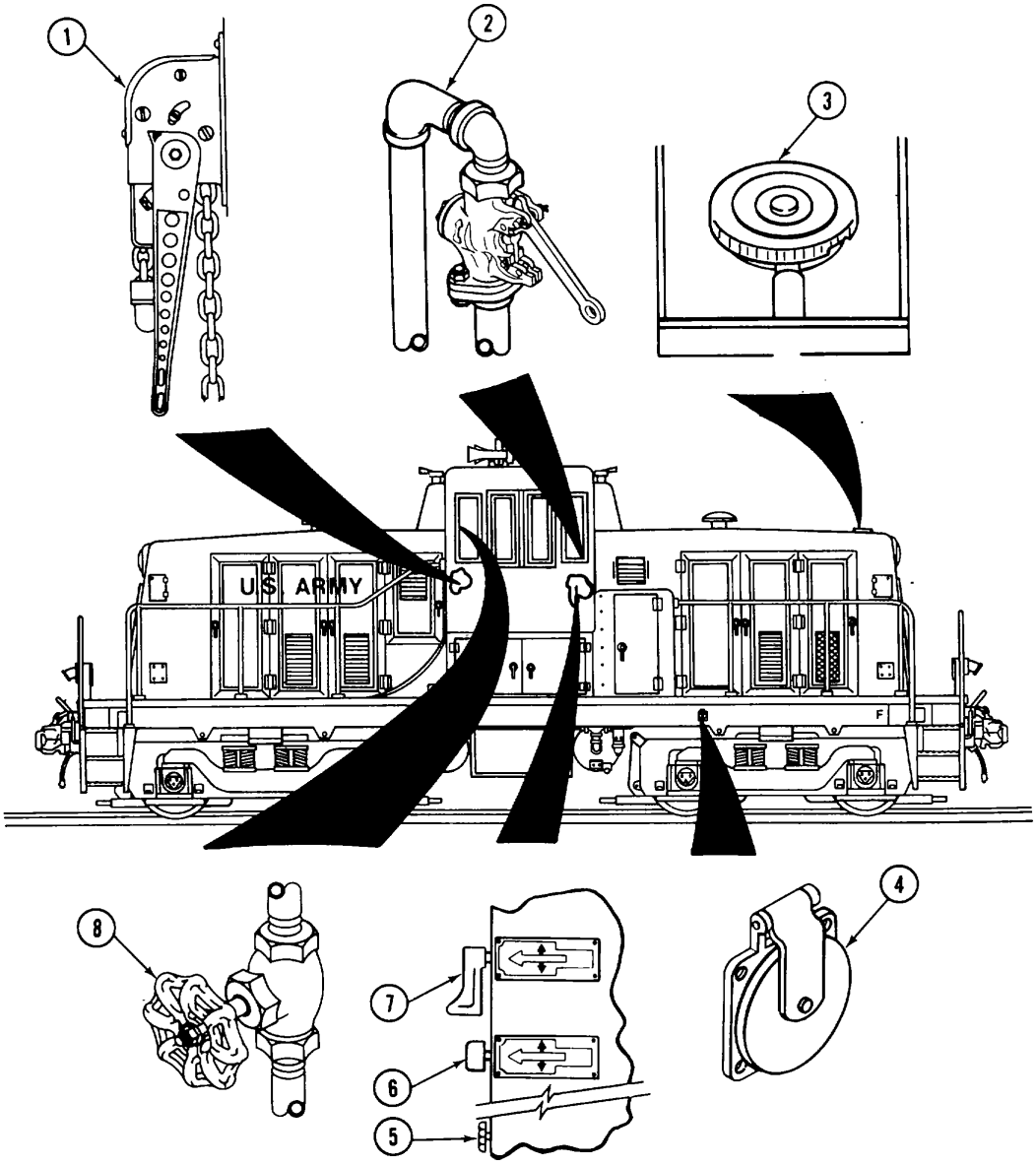

FIGURE 2-8. Miscellaneous controls. (sheet 1 of 2)

2-3. OPERATOR CONTROLS AND INDICATORS (cont)

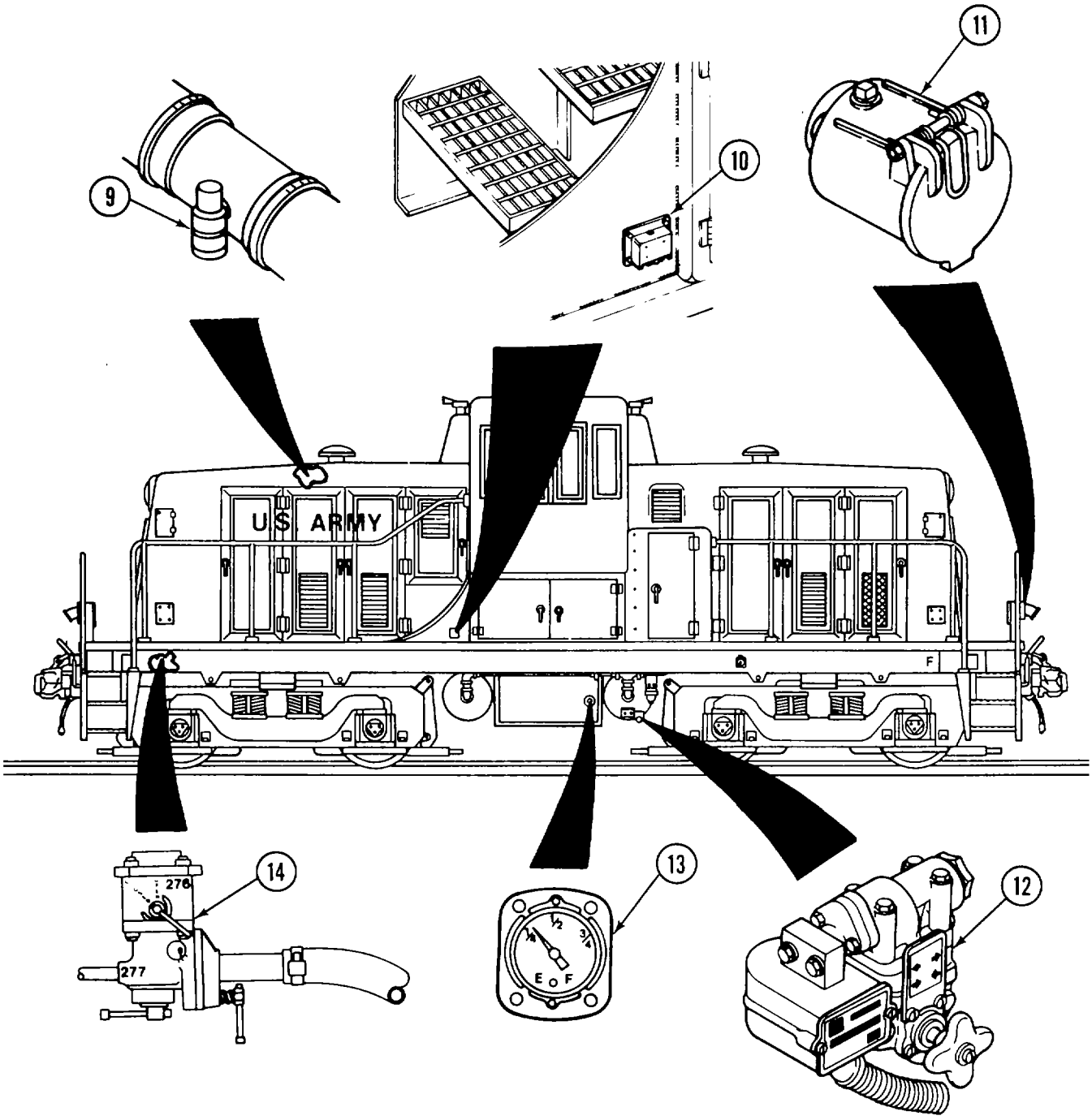

FIGURE 2-8. Miscellaneous controls. (sheet 2 of 2)

2-3. OPERATOR CONTROLS AND INDICATORS (FIG. 2-8) (cont)

Key	Control or Indicator	Function or Use
(1)	Handbrake	Provides a means of setting brakes to prevent movement of locomotive during nonoperating periods.
(2)	Emergency Brake Valve	Provides a means of obtaining an emergency brake application from a point other than the automatic brake valve.
(3)	Radiator Fill Cap	Provides a means of filling the radiator. One for each radiator.
(4)	Engine Block Heater Receptacle	Provides a connection point for electrical cable to operate engine block heater. Location is identical on left and right sides of locomotive.
(5)	Heater Water Shutoff Valves	Shuts off water to heater (same on both sides of heater).
(6)	Heater Fan Speed Switch	Sets heater fan speed to OFF, HIGH, or LOW.
(7)	Heater Fresh Air Control	Opens fresh air vent to locomotive cab.
(8)	Windshield Wiper Cutoff Valves	Controls the air to the windshield wipers.
(9)	Air Cleaner Restriction Indicator	Indicates the condition of the air cleaner element. Cleaning is required when the scale shows red. There is one on each engine.
(10)	EMER SHUTDOWN Switch	Has two positions, RUN and STOP. For normal operation, the switch is set to RUN. Provides a means of shutting down locomotive from ground in an emergency situation when other means are unsafe. Location is identical on left and right sides of locomotive.
(11)	Multiple-Unit Control Receptacle	Provides means for connecting the multiple-unit control jumper cable. There is one on each end of locomotive.
(12)	Main Air Reservoir Drain Valve	A control to provide either manual or automatic draining of the main reservoir air tanks and air filters. Location is identical on left and right sides.
(13)	Fuel Level Gage	Indicates the amount of diesel fuel in fuel tank. Location is identical on both sides of locomotive.
(14)	Sand Controller	Controls the amount of sand delivered to the rails. When indicated points to between 1 and 2, the sander will deliver approximately 1 lb (0.5 kg) of sand per minute. There are four on each side of locomotive.

2-3. OPERATOR CONTROLS AND INDICATORS (cont)

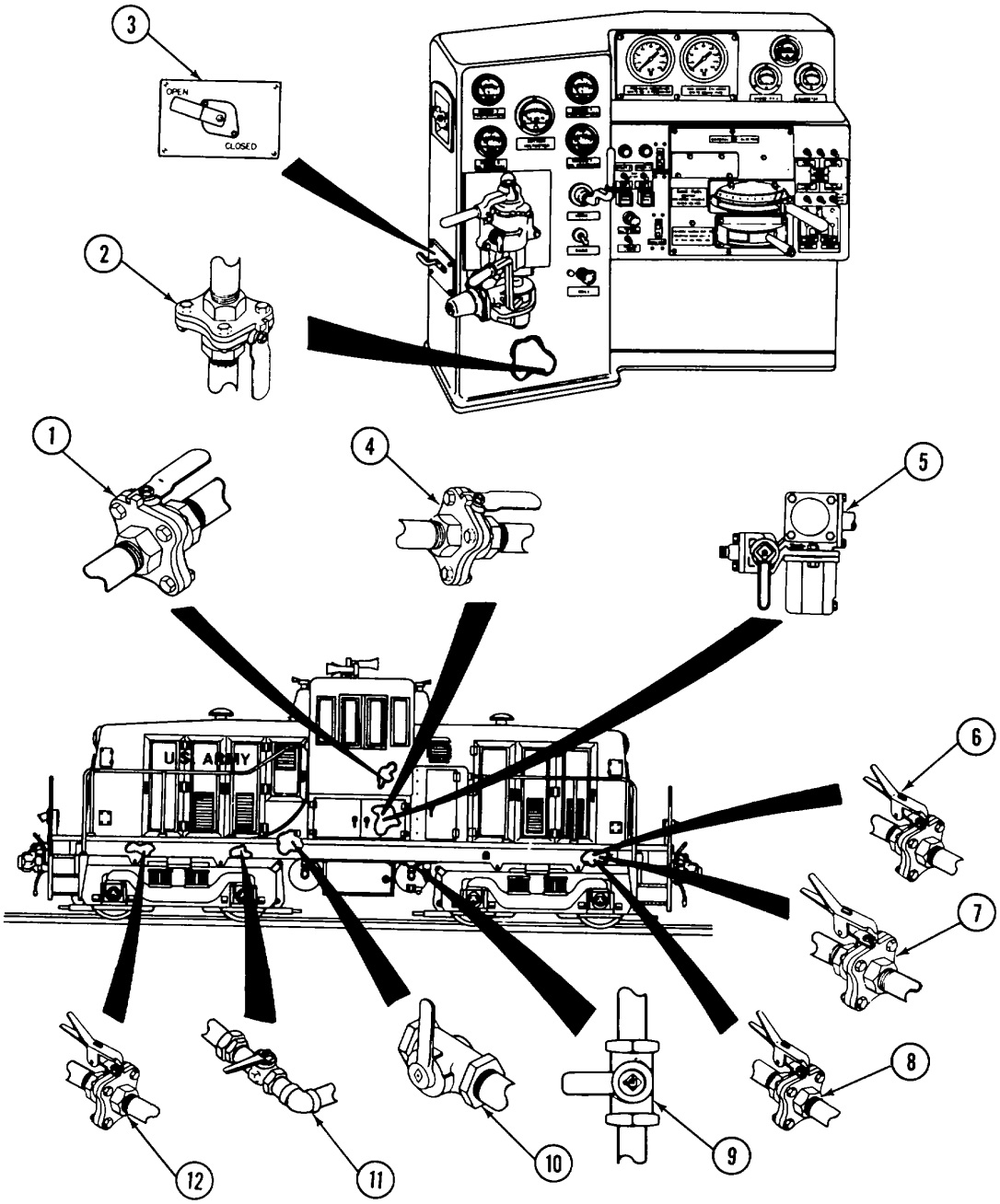

FIGURE 2-9. Air brake system cutout cocks.

2-3. OPERATOR CONTROLS AND INDICATORS (FIG. 2-9) (cont)

Key	Control or Indicator	Function or Use
(1)	Horn and Windshield Wiper Cutout Cock	Opens or closes air line to horn and windshield wipers.
(2)	Dead Engine Valve	Opens or closes the dead engine air line.
(3)	Double-Ported Cutout Cock	Opens or closes the air line from the independent brake valve to the relay air valve and distributing valve.
(4)	Governor Override Cutout Cock	Opens or closes the air supply line to the air compressor governor.
(5)	Brake Pipe Branch Pipe Cutout Cock	Opens or closes brake pipe air line to the distributing valve.
(6)	Main Reservoir Equalizing Pipe Cutout Cock	Open or closes main reservoir equalizing pipe air line for multiple-unit operation. There are four cocks, one on each corner of locomotive.
(7)	Actuating Pipe Cutout Cock	Opens or closes actuating pipe air line for multiple-unit operation. There are four cocks, one on each corner of locomotive.
(8)	Independent Application and Release Pipe Cutout Cock	Opens or closes independent application and release pipe air line for multiple-unit operation. There are four cocks, one on each corner of locomotive.
(9)	Main Air Reservoirs Cutout Cock	Opens or closes main reservoir air line.
(10)	Secondary Air System Cutout Cock	Opens or closes secondary air system air line.
(11)	Brake Cylinder Cutout Cocks	Opens or closes air line to brake cylinders, one cock each for front and rear trucks.
(12)	Sander Cutout Cocks	Opens or closes air line to sander control valves. One cock each for front and rear trucks.

2-3. OPERATOR CONTROLS AND INDICATORS (cont)

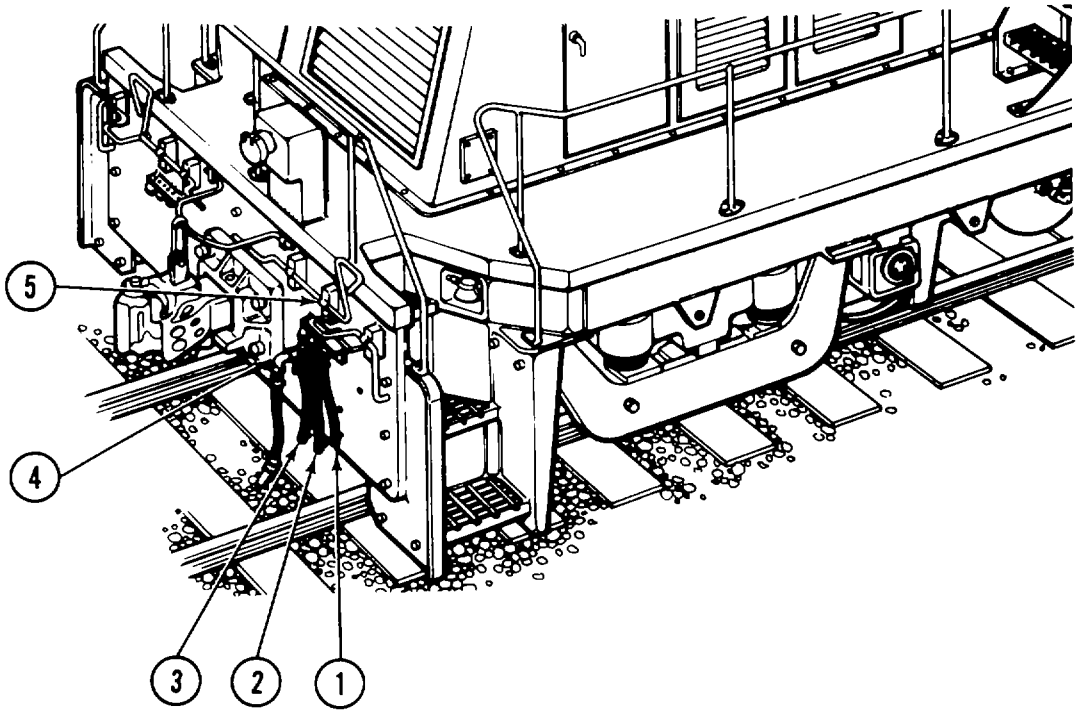

FIGURE 2-10. Trainline hookup and cutter lever.

Key	Control or Indicator	Function or Use
(1)	Independent Application and Release Pipe Hose	Furnishes independent application and release pipe air for multiple-unit operation.
(2)	Actuating Pipe Hose	Furnishes actuating pipe air for multiple-unit operation.
(3)	Main Reservoir Equalizing Pipe Hose	Furnishes main reservoir equalizing pipe air for multiple-unit operation.
(4)	Trainline Brake Pipe Hose and Cutout Cock	Furnishes brake pipe air for trainline and multiple-unit operation.
(5)	Cutter Lever	Used to release lockpin in knuckle for uncoupling.

Section II. OPERATOR/CREW PREVENTIVE MAINTENANCE CHECKS AND SERVICES (PMCS)

2-4. GENERAL

This section contains PMCS for the 80-ton diesel-electric locomotive. Table 2-1 lists checks, services, and criteria to make sure that your locomotive is prepared for operation. Perform the checks and services in table 2-1 along with the PMCS in TM 5-2815-233-14 at the specific intervals, keeping in mind the following guidelines:

a. Do (B) preventive maintenance just before operating your locomotive. Pay attention to cautions and warnings.
b. Do (D) preventive maintenance during operation (during operation means to monitor the equipment while it is actually being used).
c. Do (A) preventive maintenance right after operating your locomotive. Pay attention to cautions and warnings.

2-5. PMCS PROCEDURES

a. Always do preventive maintenance in the same order. The pattern will become a habit, and with practice, anything wrong will be seen in a hurry.
b. If something does not work or is not right, troubleshoot it with the instructions in this manual and notify unit maintenance.
c. If something looks wrong and you cannot fix it, write it on DA Form 2404, Equipment Inspection and Maintenance Worksheet, and notify your supervisor. Do not accept or operate a locomotive with a discrepancy in the Equipment Is Not Ready/Available If column. Deny use of equipment until deficiency has been corrected.
d. Make sure you read the following before you start your PMCS: (1) Take cleaning rags needed to make the required checks.

WARNING

- **Drycleaning solvent P-D-680 is toxic and flammable. Wear protective goggles and gloves and use only in a well-ventilated area. Avoid contact with skin, eyes, and clothes and don't breathe vapors. Do not use near open flame or excessive heat. The flash point is 100 - 138°F (38 - 59°C). If you become dizzy, get fresh air and medical aid immediately. If contact with eyes is made, wash your eyes and get medical aid immediately.**

- **Water, if allowed to enter electrical equipment, can cause death or serious injury to personnel and/or damage to the electrical equipment.**

(2) Keep it clean. Dirt, grease, oil, and debris get in the way and may cover up a serious problem. Clean while working as needed. Use drycleaning solvent (item 23, app E) to clean metal surfaces. Use detergent (item 3, app E) and water when you clean rubber or plastic material.

2-5. PMCS PROCEDURES (cont)

(3) Check bolts, nuts, and screws for obvious looseness or missing, bent, or broken condition. Do not try them all with a tool, but look for chipped paint, bare metal, or rust around bolt head. If you find one loose, report it to unit maintenance.

(4) Look for loose or chipped paint, rust, or gaps where parts are welded together. If a bad weld is found, report it to unit maintenance.

(5) Check electrical wires and connectors for cracked, burned, or broken insulation, bare wires, and loose or broken connectors.

(6) Check hoses and fluid lines for wear, damage, and leaks. Make sure clamps and fittings are tight. Wet spots show leaks, but a stain around a fitting or connector can mean a leak. If a leak comes from a loose fitting or connector, tighten it. If something is broken or worn out, report it to unit maintenance.

2-6. SPECIAL INSTRUCTIONS (PMCS)

It is necessary for you to know how fluid leakage affects the status of equipment. The following are definitions of the types/classes of leakage to help determine the status of locomotive parts. Learn them and be familiar with each type of leak. Remember when in doubt notify unit maintenance. Leakage definitions:

WARNING

Water, if allowed to enter electrical equipment, can cause death or serious injury to personnel and/or damage to generators, motors, and switches.

CAUTION

- **Equipment operation is allowed with minor leakage (Class I or II). Consideration must be given to the fluid capacity of the item being checked/inspected. When in doubt, notify unit maintenance.**

- **When operating with class I or II leaks, increase the frequency of fluid level checks in excess to that required in PMCS. Parts without fluid will stop working and/or cause damage to the parts.**

CLASS I - Seepage of fluid (as indicated by wetness or discoloration) not enough to form drops.

CLASS II - Leakage of fluid great enough to form drops but not enough to cause drops to drip from item being checked/inspected.

CLASS III - Leakage of fluid great enough to form drops that drip from the item being checked/inspected.

2-7. PMCS COLUMN DESCRIPTION

a. Item number column shall be used as a source of item numbers for the TM number column on DA Form 2404, Equipment Inspection and Maintenance Worksheet, in recording results of PMCS.

b. Interval column tells when each check is to be performed.

c. Item To Be Inspected column lists the checks to be performed.

d. Procedures column contains the procedure by which the check is to be performed.

e. Equipment Is Not Ready/Available If column has an entry only when the locomotive should not be operated or accepted with the malfunction.

Table 2-1. Operator/Crew Preventive Maintenance Checks and Services

NOTE

Within the designated interval, these checks are to be performed in the order listed.

B - Before **D - During** **A - After**

Item No.	INTERVAL B	D	A	Item To Be Inspected	Procedures Check for and have repaired, filled or adjusted as needed.	Equipment Is Not Ready/ Available If:
					MAKE THE FOLLOWING WALK-AROUND CHECKS:	
1	•			Exterior of Locomotive	a. Visually inspect the following items for proper operations, cracks, breaks, broken welds, and damage: Cab and engine hood doors and locks Handrails and uprights Cutter levers and steps Truck Assemblies (Check side bearing clearance) Couplers Coupling mechanism	Any component is damaged that would impair locomotive operation. No clearance is apparent.
	•				b. Inspect under locomotive for evidence of fluid leakage (fuel, oil, or coolant).	There is evidence of Class III leak.
2	•			Foundation Brakeshoes and Brake-heads.	Inspect foundation brakes for loose or dragging parts	Parts are loose or dragging
3	•			Trainline Air Hoses and Fittings	a. Check trainline air hoses for cracks, breaks, and deterioration. Check glad hands and gaskets for damage. b. Check expiration date on trainline hoses. Replace 8 years from date.	Air hoses are damaged. Expiration date past due.
4	•			Wheels	Inspect wheels for defects and worn or missing brakeshoes. Check that brakeshoes are in proper alinement.	Wheel is damaged. Brake-shoe is worn or missing.

Table 2-1. Operator/Crew Preventive Maintenance Checks and Services (continued)

B - Before D - During A - After

Item No.	INTERVAL B	D	A	Item To Be Inspected	Procedures Check for and have repaired, filled or adjusted as needed.	Equipment Is Not Ready/ Available If:
5	•			Brake Cylinder	Check that brake cylinder piston travel is between 3 and 6 inches (76 and 152 mm). inches.	Brake piston travel is not between 3 and 6
6	•			Sandboxes and Sand Controllers	Check that the sandboxes contain sufficient sand. Add sand as required. Check sand controllers for proper operation.	Sanders are not operating.
7	•		•	Fuel Tank, Lines, and Fittings	a. Check fuel supply on fuel level gage on fuel tank.	
	•				b. Service fuel tank by filling tank with proper grade of fuel.	
	•				c. Check lines and fittings for fuel leaks.	There are fuel leaks.
8	•			Cooling Radiator	Check coolant level in radiator. Check that coolant is at proper level. Check for coolant leaks. If coolant is low, notify unit maintenance.	There is evidence of Class III leak.
9	•			Cooling Fan Belts	Check for broken, loose, or frayed belts.	Belts are broken, loose, or frayed.
10	•			Windshield Wiper	Check wiper arms and blades for wear and damage. Check for proper operation.	Windshield wipers do not operate properly.
11	•			Handbrake	Check handbrake for proper operation.	Handbrake does not operate properly.
12	•			Window Glass and Sash	a. Clean windows with a soft cloth.	
	•				b. Check glass for cracks.	Windshield is broken or cracked.
	•				c. Check sash for damage.	

Table 2-1. Operator/Crew Preventive Maintenance Checks and Services (continued)

B - Before **D - During** **A - After**

Item No.	INTERVAL B	D	A	Item To Be Inspected	Procedures Check for and have repaired, filled or adjusted as needed.	Equipment Is Not Ready/ Available If:
13	•			Seats and Cushions	a. Inspect seats and mounts for obvious damage. b. Inspect cushion for rips and damage.	Seat mount is unsecure or damaged.
14	•		•	Engine Oil Level Dipstick	Check oil level. Add oil in accordance with LO 55-2210-224-12.	
15	•			Battery Charging Alternator Belts	Check for broken, loose, or frayed alternator belts.	Belts are broken, loose, or frayed.
16	•			Air Compressor Oil Level Dipstick	Check oil level. Add oil in accordance with L0 55-2210-224-12.	
17	•			Air Compressor Belts	Check for broken, loose, or frayed belts.	Belts are broken, loose, or frayed.
18	•			Fire Extinguishers	Check for broken seal. Check gage for improper indication.	Seal is broken or gage indication is improper.
19	•			Air Cleaner Indicator	Check to see that the green scale is visible.	Red scale is visible.
20	•	•		Instrument Gages and Indicators	a. Inspect instrument gages and indicators for cracked or broken glass and security of mounting.	
	•				b. Start the engine and observe instrument gages and indicators to check that indications during operation are normal as indicated below: Engine oil pressure: Normal - hot at 2100 rpm: 40-70 psi (276-483 kPa)	One or more instruments are inoperative or giving faulty indications.

Table 2-1. Operator/Crew Preventive Maintenance Checks and Services (continued)

B - Before D - During A - After

Item No.	INTERVAL B	D	A	Item To Be Inspected	Procedures Check for and have repaired, filled or adjusted as needed.	Equipment Is Not Ready/ Available If:
20 (cont)					Minimum - hot at 800 rpm: 30 psi (207 kPa) IDLE-hot: 10-15 psi (69-103 kPa) IDLE-hot minimum: 8 psi (55 kPa) Engine coolant temperature gage: 100-198°F (38-92°C) Air compressor oil pressure gage: 20-30 psi (138-207 kPa) Main reservoir pressure: 120-130 psi (827-896 kPa) Brake pipe and equalizing reservoir pressure with brakes released: Above 80 psi (552 kPa) Brake cylinder pressure: Brakes released: 0 psi Brakes applied: 45 psi (310 kPa) Load meter (idle): 0 amps Load meter (operating): 0-1500 amps Battery Voltmeter Indicator: Green Area WHEEL SLIP Indicator Light: OFF GROUND RELAY Indicator Light: OFF	Pressure indication is less than 20 psi (138 kPa).
21	•			Multiple-Unit Engine System Warning Bell, Engine System Warning Buzzer, and Horn Assembly	Check for proper operation.	A warning device is inoperative.

Table 2-1. Operator/Crew Preventive Maintenance Checks and Services (continued)

B - Before **D - During** **A - After**

Item No.	INTERVAL B	D	A	Item To Be Inspected	Procedures Check for and have repaired, filled or adjusted as needed.	Equipment Is Not Ready/ Available If:
22	•			Automatic and Independent Brake Valves	Check brake valves for proper operation.	Brake valves operate improperly.
23	•		•	Air Reservoirs	Drain moisture from main reservoirs by turning drain valve knob clockwise.	
24	•	•		Proper operation of Locomotive	Check for unusual noises.	Upon detection of unusual noise, locomotive is stopped and visual inspection reveals defective components.
25	•	•		Night Lights	Check the following lights for proper operation if the locomotive is to be used after daylight: Gage lights Cab lights Step lights Headlights Cowling lights Warning lights	Lights are inoperative.

Section III. OPERATION UNDER USUAL CONDITIONS

2-8. GENERAL

a. This section covers procedures you will normally be using in operating the 80-ton, diesel-electric locomotive.

b. Specific instructions are given for starting, operating, stopping, parking, and shutting down the locomotive.

c. Throughout this section, guidelines are given for adjusting control settings and operating techniques as well as the specific operating procedures so that you will be able to readily respond to different situations when you operate the locomotive.

CAUTION

Know the capabilities of your locomotive. Do not try to make it exceed those limitations. Know your operator controls and indicators before starting and operating your locomotive.

2-9. OPERATION OF BRAKE SYSTEM

a. Automatic Brake Valve.

(1) RELEASE (Running) Position. This position is for charging the brake system and releasing the locomotive and train brakes. It is located with the brake valve handle at the extreme left of the quadrant.

(2) MINIMUM REDUCTION Position. This position is located with the brake valve handle against the first raised portion on the quadrant to the right of RELEASE position. With the brake valve handle moved to this position, a minimum of brake force is applied.

(3) SERVICE Position. This position consists of a sector of brake valve handle movement to the right of RELEASE position. In moving the brake valve handle from left to right through this sector, the degree of brake application is increased until, with the handle at the extreme right of this sector, the handle is in FULL SERVICE position and a full service brake application is obtained.

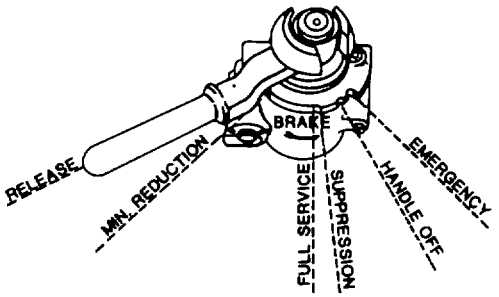

2-9. OPERATION OF BRAKE SYSTEM (cont)

(4) SUPPRESSION Position. This position is used on brake pipe testing and on brake systems that have penalty and safety control brake protection. The brake system on this locomotive does not contain penalty or safety control features.

(5) HANDLE-OFF Position. This position is located at the first quadrant notch, to the right of SUPPRESSION position. The handle is removable in this position. This is the position in which the handle should be placed on trailing units of a multiple-unit locomotive or on locomotives being towed dead in a train.

(6) EMERGENCY Position. This position is located to the extreme right of the brake valve quadrant. It is the position that must be used for making emergency brake applications and for resetting after an emergency application if break-in-two feature is available.

b. Cutoff Pilot Valve.

(1) The cutoff pilot valve portion provides the function of the old double heading cock for cutting in and cutting out the brakes when desired. The two-position type is employed on locomotives intended for freight service only, and its positions are IN and OUT. The cutoff valve handle is held in each of its handle positions by spring loading, and it is necessary to first depress the handle before it can be moved from one position to another.

(2) For normal operations of the locomotive as a controlling unit, the cutoff pilot valve handle must be placed in the IN position. OUT position is to be used when hauling the locomotive dead or as a trailing unit in a multiple-unit locomotive. It is also placed in OUT position when making brake pipe leakage test.

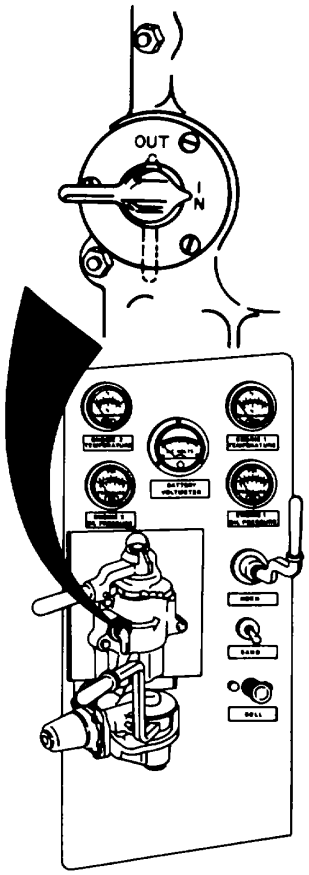

2-9. OPERATION OF BRAKE SYSTEM (cont)

c. Independent Brake Valve.

(1) The independent brake valve provides control of the locomotive brake cylinder pressure independent of the train brakes. The brake valve handle has two positions; RELEASE position at the extreme left end of the quadrant and FULL APPLICATION position at the extreme right end of the quadrant. From RELEASE to FULL APPLICATION position is an application zone or sector and the further the handle is moved to the right into this sector, the greater will be the application of brakes until a full application is obtained at the extreme right end of handle movement.

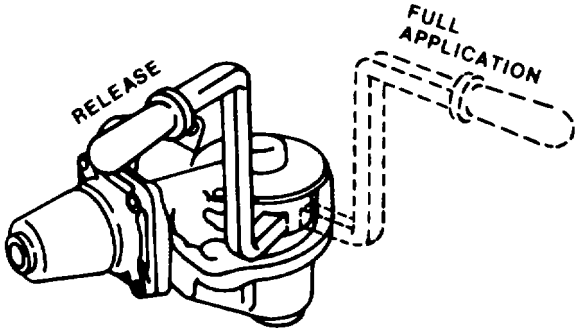

(2) Depression of the independent brake valve handle whenever the handle is in RELEASE position will cause the release of any brake cylinder pressure existing on the locomotive.

(3) Depression of the independent brake valve handle with it somewhere in the application zone will release the brake cylinder pressure only to the value corresponding to the position of the handle in the application zone.

d. Emergency Brake Valve.

(1) The emergency brake valve is located near the fireman's position. It is installed at the end of a branch pipe from the brake pipe. It provides a means of obtaining an automatic emergency brake application from a point other than the brake valve.

(2) The emergency brake valve should be used only in case of actual danger, and then should be left open until the train stops. After the operating lever has been pulled, it must be manually reset before brake pipe can be charged.

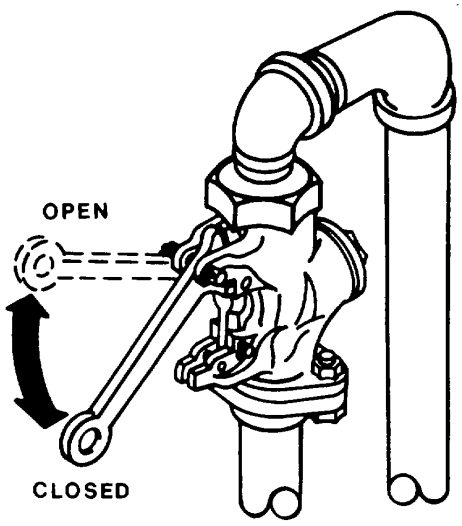

2-10. PRESTART INSTRUCTIONS

a. Do the before (B) operation PMCS in table 2-1 and paragraphs 2-5 and 2-6.

b. Refer to paragraph 2-3 for location and make sure the following air valves and cocks are CLOSED:

NOTE

Cutoff cocks with bent handles are open (in) when the handle is parallel with the flow of air. Cutoff cocks with straight handles are open (in) when the handle is perpendicular to the flow of air.

(1) Automatic drain valves in the air reservoirs (The manual valve is opened by turning clockwise, closed by turning counterclockwise.)

(2) Trainline air hose cutout cocks at each end of the locomotive (If locomotive is connected in multiple-unit operation, these cocks are **OPEN**.)

(3) Dead engine valve

c. Check that the following air cocks are OPEN:

(1) Main reservoir cutout cock

(2) Secondary air system cutout cock

(3) Brake cylinder cutout cocks

(4) Cutout cocks in supply line to sanders

(5) Horn and windshield wipers cutout cock

(6) Cutout cock in brake pipe branch pipe to distributing valve

(7) Governor override cutout cock

(8) Double-ported cutout cock

2-10. PRESTART INSTRUCTIONS (cont)

d. Set controls as follows:

(1) CONTROL switch (1) to OFF.

(2) Both ENGINE STOP switches (2) to STOP position.

WARNING

High voltage is used in the operation of equipment. Remove rings, bracelets, wristwatches, and neck chains before working around the locomotive. Jewelry can catch on equipment and cause injury, or may short across an electrical circuit and cause death or severe injury.

(3) BS switch (3) to close.

(4) GRCO switch (4) to close.

(5) Throttle (5) to IDLE.

(6) Reverser (6) to NEUTRAL position.

(7) Independent brake valve (7) to FULL APPLICATION.

(8) Cutoff pilot valve (8) to IN.

(9) Automatic brake valve (9) to RELEASE.

(10) EMER SHUTDOWN switch (10) to RUN.

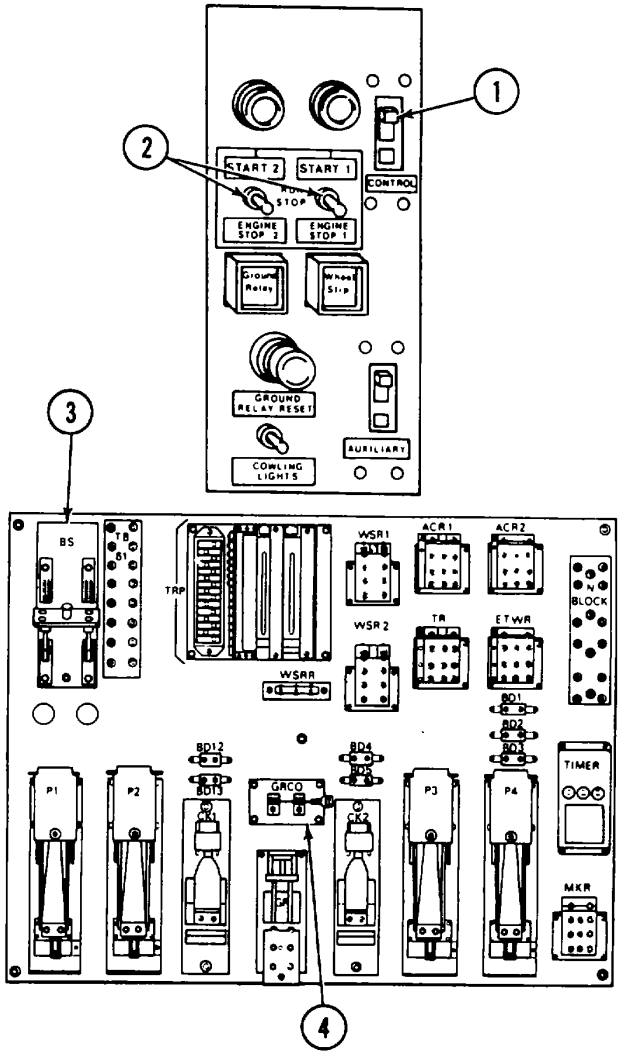

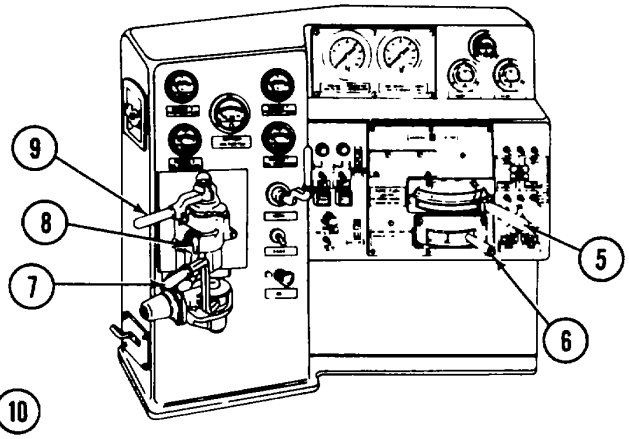

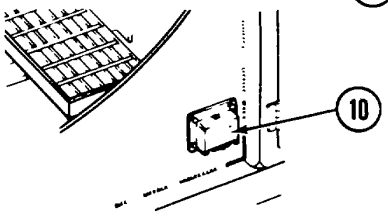

2-11. STARTING ENGINE

WARNING

Operation of this locomotive presents a noise hazard to personnel in the area. The noise level exceeds the allowable limits for unprotected personnel. Wear aural protectors or earplugs.

NOTE

With throttle in STOP position, engine will start but will not remain running when the start switch is released. Throttle must be in IDLE position for engine to remain running.

a. Set CONTROL circuit breaker (1) to ON.

NOTE

Both engines cannot be started at the same time.

b. Set ENGINE STOP switch (2) of engine to be started to RUN. Warning buzzer will sound.

c. Press START pushbutton (3) of engine to be started, and hold firmly until engine starts and ENGINE OIL PRESSURE gage (4) indicates at least 8 psi (55 kPa). The warning buzzer should stop.

d. After the engine starts.

(1) Check ENGINE OIL PRESSURE gage (4) to see that pressure rises above 8 psi (55 kPa) within 3 to 10 seconds. If oil pressure does not rise above 8 psi (55 kPa), the engine will automatically shut down when start button is released.

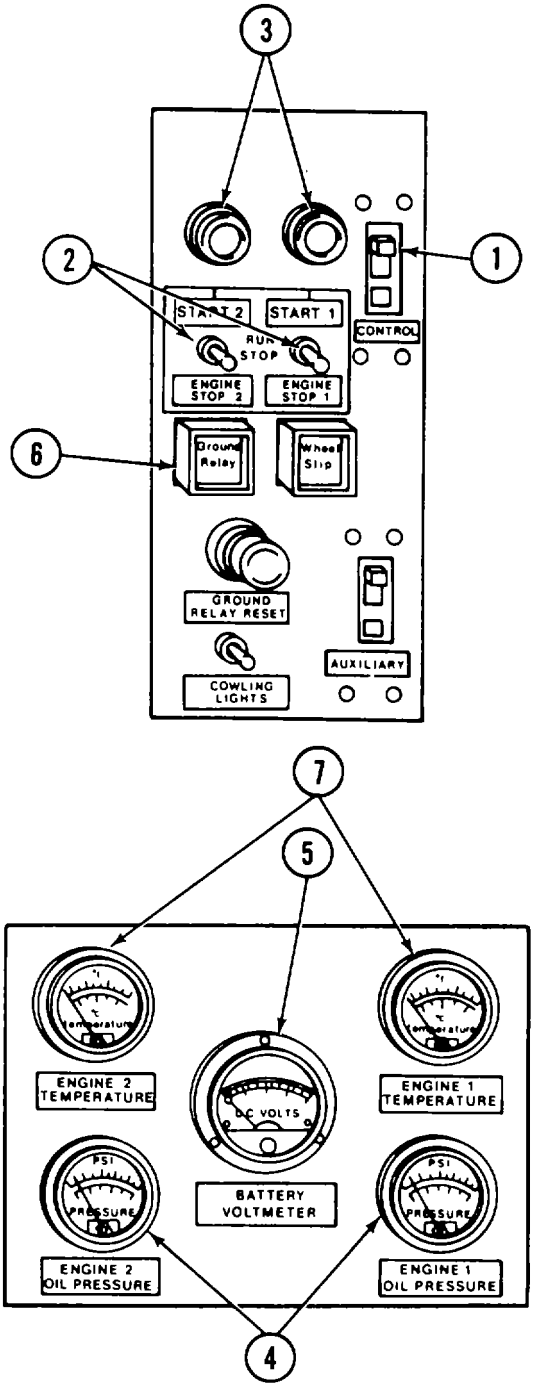

2-11. STARTING ENGINE (cont)

(2) Slightly raise the idle speed and check BATTERY VOLTMETER gage (5) to see that battery is being charged.

(3) Check GROUND RELAY indicator light (6) to see that ground relay did not trip when engine started.

e. Repeat steps a thru c and start the other engine. Idle the engines until ENGINE TEMPERATURE gages (7) indicate above 130°F (54°C) before loading.

2-12. PRECAUTIONS BEFORE MOVING LOCOMO-TIVE

a. Check automatic brake valve (1) and independent brake valve (2) for proper operation in the FULL APPLICATION and RELEASE positions. Exit cab and visually observe if the brakeshoes are being applied and released.

b. Check main and equalizing pressure gage (3) for a main reservoir pressure reading of 120-130 psi (827-896 kPa) and an equalizing pressure reading of 80 psi (552 kPa). c. Check brake pipe and brake cylinder pressure gage (4) for a brake pipe pressure reading of 80 psi (552 kPa) and a brake cylinder reading of zero. d. Check ENGINE TEMPERATURE 1 and ENGINE TEMPERATURE 2 gages (5) for an indication of above 130°F (54°C).

NOTE

Auxiliary circuit breaker (6) must be in ON position to operate headlights.

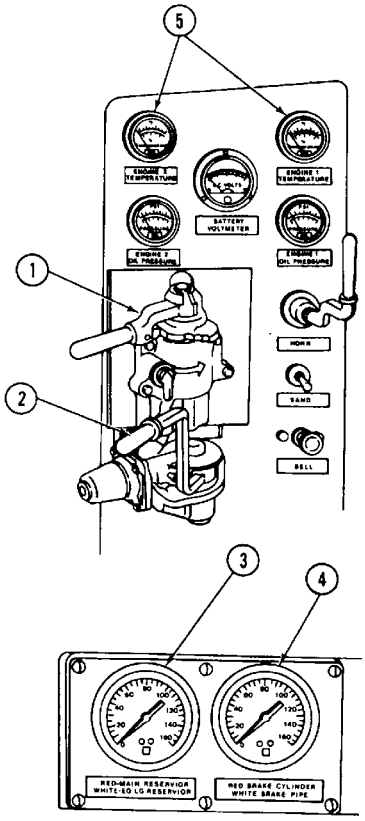

e. Check for proper operation of the following:

Horn
Bell ringer
Headlights
Windshield wiper

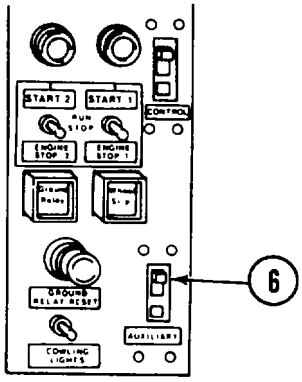

2-13. PREOPERATION AIRBRAKE TESTS

BEFORE MOVING YOUR LOCOMOTIVE, PERFORM THE FOLLOWING TESTS.

a. Locomotive Brake Pipe Leakage Test.

(1) With the brake system fully charged and with cutoff pilot valve (1) in the IN position, use automatic brake valve handle (2) to make a 15-psi (103 kPa) brake pipe reduction. After the exhaust of brake pipe pressure ceases, move the cutoff pilot valve to the OUT position. Time the reduction of brake pipe pressure as indicated by locomotive brake pipe gage (3). The brake pipe leakage should not exceed 5 psi (34 kPa) drop in a 1-minute time period.

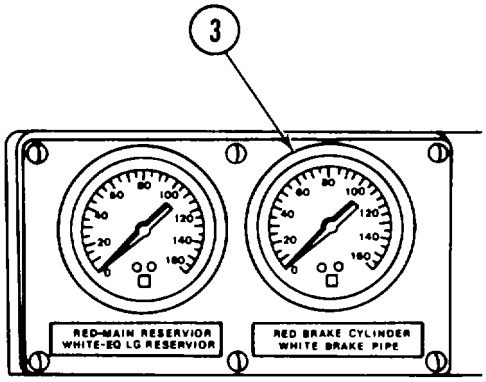

(2) At the completion of the test, move cutoff pilot valve (1) to the IN position and automatic brake valve handle (2) to the RELEASE position to recharge the brake system. Inspect the brake cylinder to check that brakes have released.

(3) Move independent brake valve handle

(4) to FULL APPLICATION. Inspect the brake cylinders to check that brakes have applied. Move independent brake handle to RELEASE position. Inspect brake cylinders to check that brakes have released.

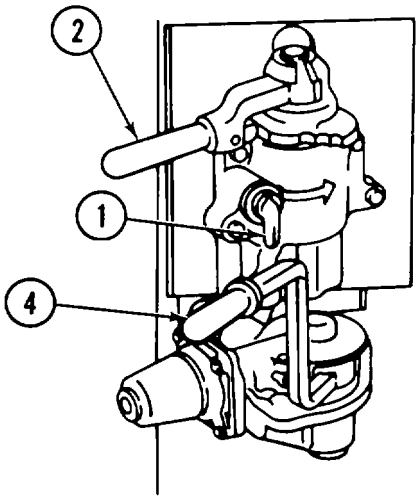

b. Emergency Test.

(1) Set emergency brake valve (5) on fireman's side of cab to OPEN.

(2) Move automatic brake valve handle (2) to EMERGENCY. Set emergency brake valve (5) on fireman's side of cab to CLOSE.

(3) Inspect the brake cylinder to check that brakes have applied.

(4) Move automatic brake valve handle (2) to RELEASE.

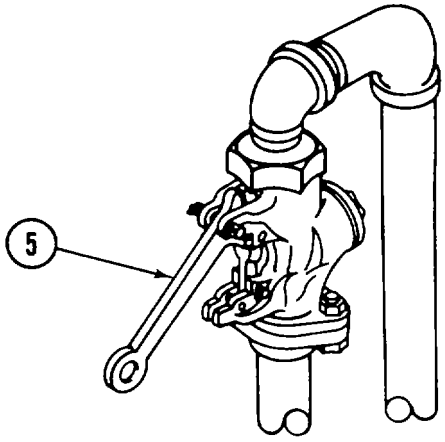

2-13. PREOPERATION AIRBRAKE TESTS (cont)

c. Train Airbrake Terminal Test.

(1) With the brake system fully charged and with cutoff pilot valve (1) in the IN position, move automatic brake valve handle (2) toward SERVICE position, until the equalizing reservoir pressure is reduced 15 psi (103 kPa); then stop and leave the handle in this position.

(2) Move cutoff pilot valve (1) to the OUT position. Wait 45 to 60 seconds and time the reduction of brake pipe pressure as indicated by locomotive brake pipe gage (3). Brake pipe leakage should not exceed 5 psi (34 kPa) drop in 1 minute.

(3) Optional: During the inspection of the train, automatic brake valve handle (2) may be moved toward FULL SERVICE position to reduce equalizing reservoir slightly below brake pipe pressure, and cutoff pilot valve (1) returned to the IN position. This action will prevent excessive loss of brake pipe pressure while maintaining a service brake application during train inspection.

(4) Upon completion of the train inspection and after a signal is received to release the brakes, move automatic brake valve handle (2) to RELEASE position, and if not already there, place cutoff pilot valve (1) in the IN position to release the train brakes.

IF THE LOCOMOTIVE FAILS TO PASS EITHER OF THE ABOVE TESTS, NOTIFY UNIT MAINTENANCE.

2-14. MOVING LIGHT LOCOMOTIVE

CAUTION

Never operate with handbrake partially applied. To guarantee release, make sure that the chain weight and its snubber are up against the bottom of the housing. If not, the handbrake must again be fully set and then released.

a. Release handbrake (1).

b. Move reverser (2) to FORWARD or REVERSE, depending on direction of travel.

c. Move independent brake valve handle (3) to RELEASE position.

d. Determine if the track ahead is clear and open bell ringer valve (4).

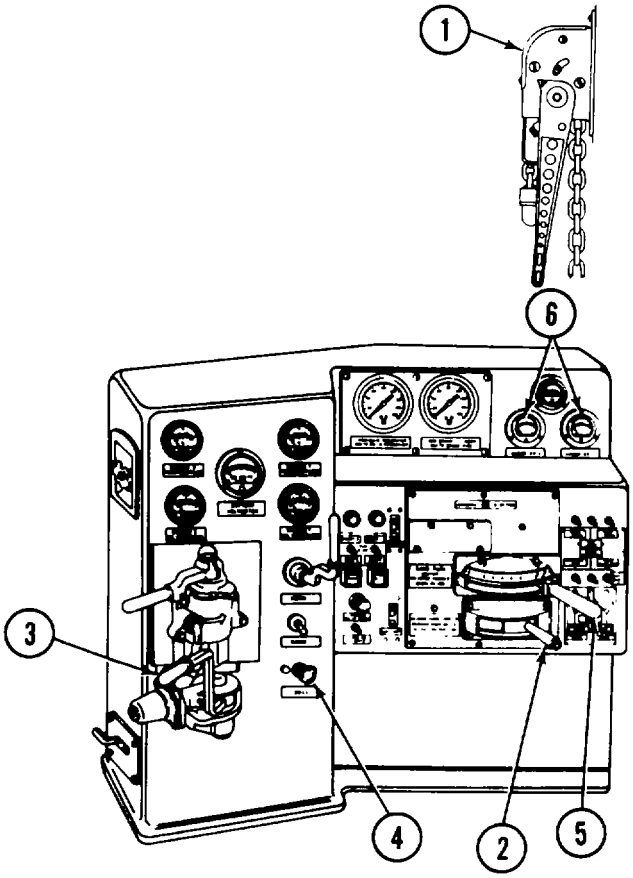

2-14. MOVING LIGHT LOCOMOTIVE (cont)

e. Move throttle (5) to first notch and hold until load meters (6) indicate a flow of current.

f. When load meters (6) indicate current, slowly advance throttle (5) until desired acceleration is obtained.

g. If headlights are to be used, set headlight switches (7) to proper position.

h. Observe that the locomotive rolls freely.

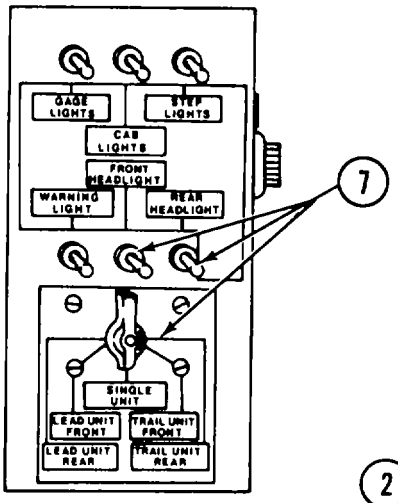

2-15. STOPPING LIGHT LOCOMOTIVE

a. Normal stop.

(1) Reduce throttle (1) until load meters (2) indicate that the current has dropped.

(2) Move throttle (1) to IDLE, and apply independent brake valve (3) by moving the handle forward, away from the RELEASE position. The amount of application depends on the distance the handle is advanced toward FULL APPLICATION position.

(3) Move reverser (4) to NEUTRAL position.

b. Emergency Stop.

(1) Move throttle (1) to IDLE and independent brake valve (3) to the FULL APPLICATION position.

(2) Move reverser (4) to NEUTRAL position.

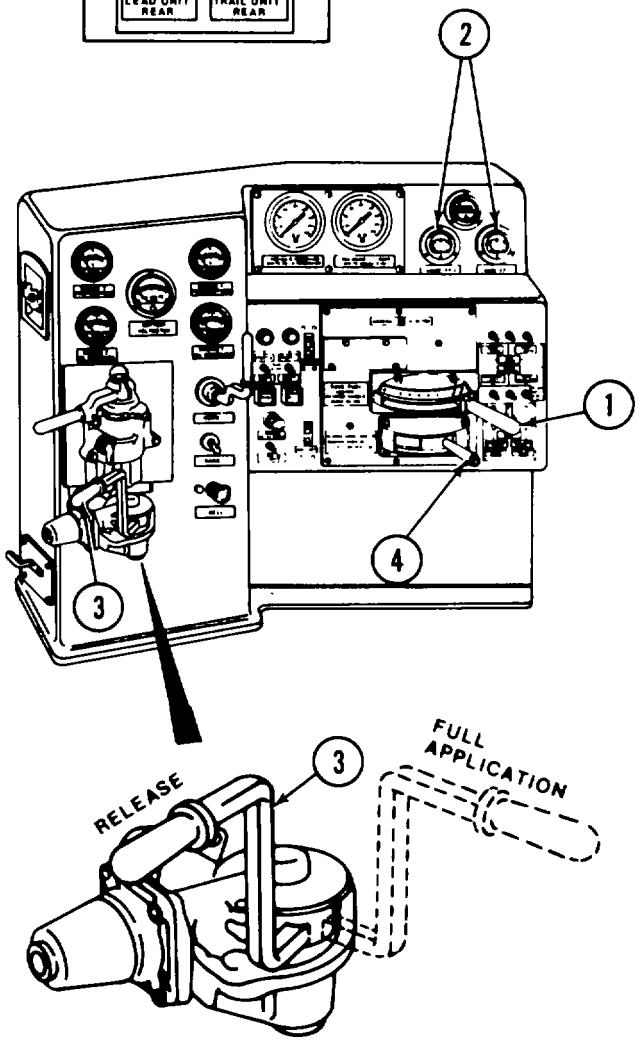

2-16. CHANGING DIRECTION WITH LIGHT LOCOMOTIVE

a. Stop the locomotive (para 2-15).

WARNING

Do not move reverser handle while the locomotive is in motion. Do not drift in one direction with the reverser handle set in the opposite direction. Serious injury to personnel and damage to the electrical equipment may result if this rule is disregarded.

b. Move reverser (1) to opposite direction.

c. Release the brake (2) and advance throttle (3) in the normal manner.

2-17. STOPPING ENGINE

a. Normal Stop.

(1) Move throttle (1) to IDLE position.

(2) Move independent brake valve (2) to FULL APPLICATION.

(3) Move reverser (3) to NEUTRAL position.

(4) With throttle (1) in IDLE position, run engines for 5 minutes to cool engines.

(5) Set both ENGINE STOP switches (4) to STOP position.

(6) Set CONTROL circuit breaker (5) to OFF.

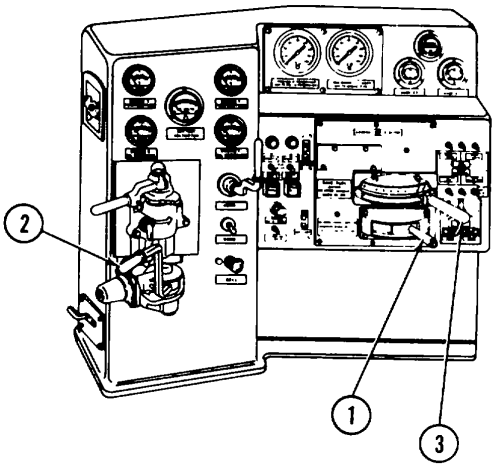

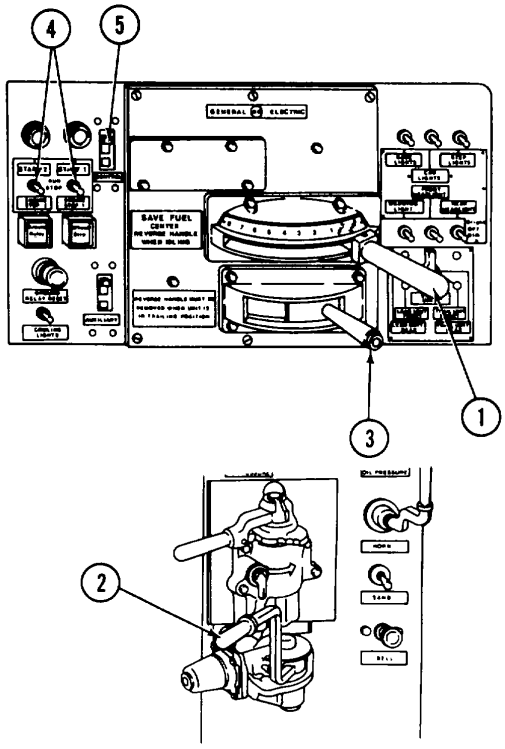

2-17. STOPPING ENGINE (cont)

WARNING

- **High voltage is used in the operation of equipment. Do not be misled by the term LOW VOLTAGE. Potentials as low as 50 volts may cause death.**

- **Remove rings, bracelets, wristwatches, and neck chains before working around the locomotive. Jewelry can catch on equipment and cause injury, or may short across an electrical circuit and cause severe burns or electrical shock.**

(7) Open battery switch (6) and apply handbrake (7) if the locomotive is to be taken out of service.

(8) Check the engine crankcase oil level. Oil level shall be between ADD and FULL marks on the dipstick gage.

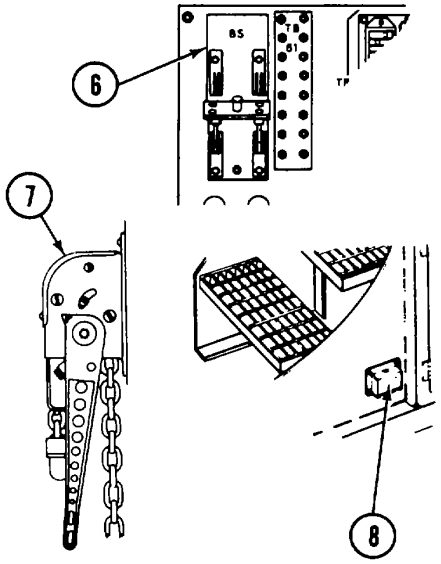

b. Emergency Stop. Both engines can be shut down external to the cab by positioning EMER SHUTDOWN switch (8), on either side of the locomotive, to OFF.

2-18. COUPLING TO TRAIN AND PUMPING UP AIR

WARNING

Closely observe brakeman's signal. Failure to do so may result in death or injury to personnel.

CAUTION

Coupling speed should not exceed 2 mph (3 km/h) or damage to the locomotive and cars may result.

a. Stop a safe distance from the head car or other unit until it is determined that knuckles are open and couplers are properly alined. Check that trainline air hoses are in proper position. Advance slowly to couple train.

b. After coupling to train, stretch coupling to check that couplers are locked.

c. Couple trainline air hoses and open angle cock slowly.

2-18. COUPLING TO TRAIN AND PUMPING UP AIR (cont)

d. When the train's air system has not been charged by a yard line and the main reservoir pressure falls below 120 psi (827 kPa), cut in the brakes as follows:

(1) Move throttle (1) to IDLE.

(2) Move reverser (2) to NEUTRAL position.

(3) Advance throttle (1) slowly (not to exceed position #4) until the required pumping rate is reached; as main reservoir pressure builds up, reduce the throttle.

e. Perform train airbrake terminal test in accordance with paragraph 2-13c.

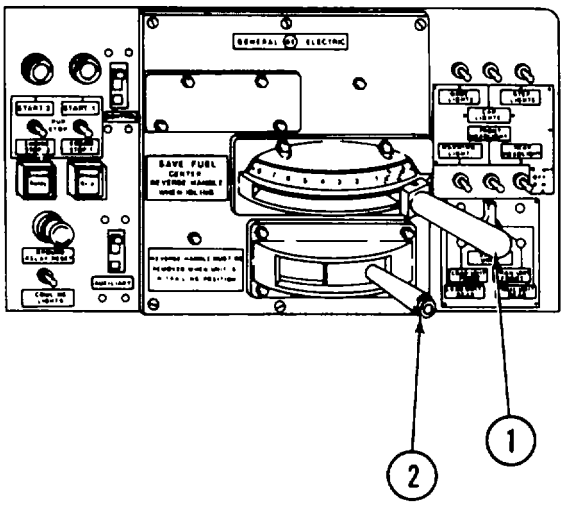

2-19. UNCOUPLING PROCEDURES

a. Move automatic brake valve to make a minimum of 20 psi (138 kPa) brake pipe reduction to check that brakes are properly set.

b. Signal brakeman to turn cutout cock on trainline hose to CLOSE.

c. Signal brakeman to lift cutter lever and check that coupler pin is disconnected.

WARNING

To prevent injury, check that brakeman is away from trainline hoses before moving locomotive.

d. Proceed forward or backward slowly and check that coupler and trainline hoses disconnect properly.

2-20. CUTTING OFF LOCOMOTIVE WITH OR WITHOUT CARS

a. When the locomotive is to be cut off or the train is to be separated, leave the brakes applied with a full service application.

b. On completion of the full service reduction, give one short blast of the whistle to inform the trainmen they may close the angle cocks and cut off the multiple-unit (MU) locomotive or cars. This is very important to prevent brakes from sticking at the rear of train and to prevent cars from moving on grades.

2-21. STARTING TRAIN

Starting a train depends on the grade, weather condition, type, length, weight, and amount of slack. Make a brake test (para 2-13) to determine if all brakes are functioning properly in the SERVICE and RELEASE positions and that no handbrakes are set prior to starting.

2-22. WHEEL SLIPPING

CAUTION

If slipping occurs, reduce throttle first. Never apply sand while the wheels are slipping, as this could cause a broken traction motor gear.

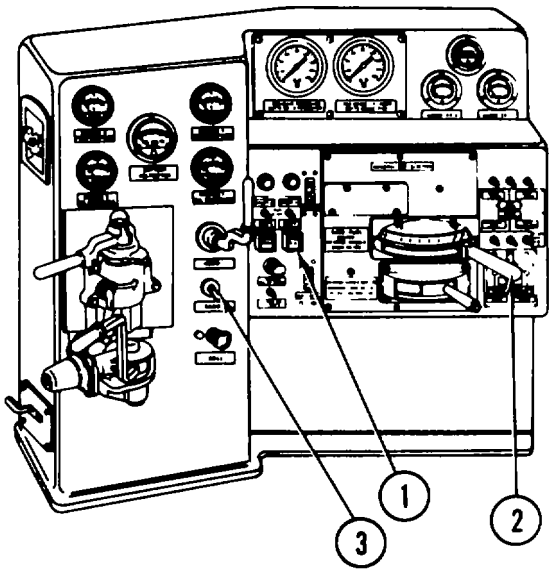

a. If WHEEL SLIP indicating light (1) flashes, one or more pairs of wheels are slipping. Reduce throttle (2) until light extinguishes. Apply sand with sand lever (3) and slowly open the throttle.

b. Under extreme rail conditions (excessive grades, rain, ice, or snow) repeated slipping may occur. In these instances, reduce throttle (2) to apply maximum power without causing wheel slippage.

2-23. LOAD LIMITS

a. Keep the locomotive within proper load limits. The load meters are divided into green and orange segments. The locomotive may be operated continuously with the needles indicating in the green segment. If the needles indicate in the orange (overload) segment, the locomotive must not be operated for more than the number of minutes indicated by the position of the load meter needles.

b. When the time limit for that overload range is reached, the generator and motors are at their maximum allowable temperature; to avoid severe damage from overheating, allow excess heat to dissipate by one of the following methods:

(1) With load cut off and engine idling, allow a cooling period of 15 to 30 minutes, after which operation in any one of the overload ranges is again permitted with cooling period to follow.

(2) Reduce load to continuous range on the dial and continue operation in this range.

2-24. GROUND RELAY ACTION

CAUTION

Repeated tripping of the ground relay, accompanied by unusual noises such as continuous thumping or squealing, may be an indication of serious traction motor trouble that must be investigated at once.

a. If a ground occurs in the high-voltage circuit, the ground relay will trip and the engine will return to idle, and the GROUND RELAY indicating light (1) will light.

b. When the ground relay trips, correct the trouble as follows:

(1) The ground relay may be energized by some temporary condition. Reset by returning throttle (2) to IDLE position and pressing GROUND RELAY RESET pushbutton (3). Normal operation may then be resumed.

(2) If the ground persists, stop engine and report this condition to your supervisor.

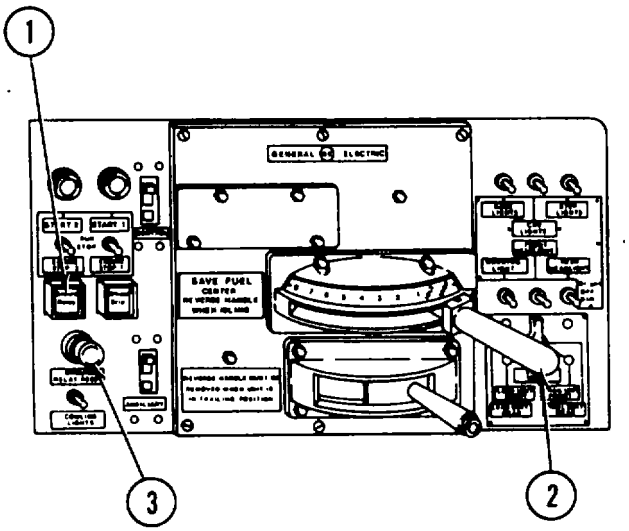

2-25. RUNNING OVER RAILROAD CROSSOVERS

When running over crossovers, move the throttle handle to reduce speed and avoid excessive jarring of gears and electrical pitting of commutators.

2-26. EMERGENCY APPLICATION OF BRAKES

a. When the brakes apply automatically from the train at an emergency rate of reduction (indicated by the brake pipe pressure falling rapidly to zero), place automatic brake valve handle (1) in EMERGENCY position to prevent the escape of main reservoir pressure, and leave it in that position until train stops. Move throttle handle (2) to IDLE position. Push sand control (3) until train stops.

b. Use independent brake valve (4) to reduce brake cylinder pressure on the locomotive to prevent sliding the wheels. Then use the independent brake heavily for the last 100 feet (30.48 m) to avoid a runout of slack as the train stops.

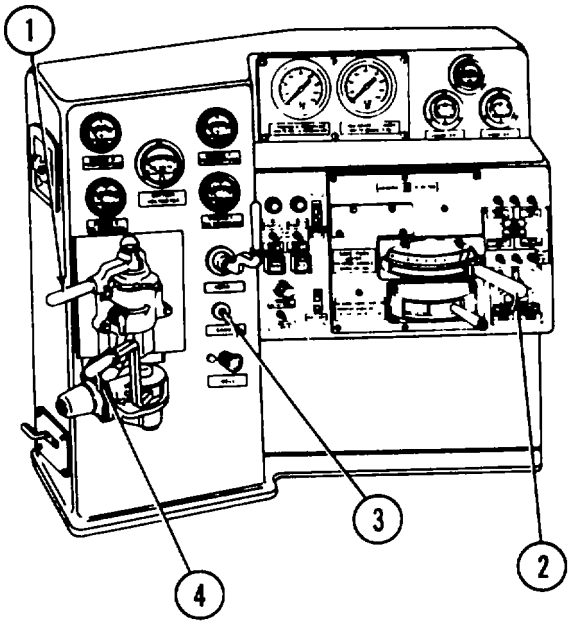

2-26. EMERGENCY APPLICATION OF BRAKES (cont)

c. After stopping, wait 2 minutes, then place automatic brake valve (1) in RELEASE position for at least 30 seconds, then move to SUPPRESSION.

d. Brake pipe pressure falling to ZERO indicates an air hose is parted or a brake pipe is broken. In either case, move automatic brake valve (1) to RELEASE position to provide pressure for trainman to locate the defect. If brake pipe is not broken or hose parted, leave automatic brake valve in RELEASE position to release brakes.

2-27. BRAKING WITH POWER

When braking with power, drawbar pull rapidly increases as the speed decreases for any given throttle handle position. This pull may be great enough to part the train unless the throttle handle is reduced as the train loses speed. The load meter indicates the pull of the locomotive. A constant pull can be maintained on the train during a slowdown if a steady amperage is kept on the load meter by consecutively reducing the throttle handle a notch whenever the amperage starts to increase. Keep the independent brake fully released during power braking. The throttle handle must be in IDLE position before the locomotive comes to a stop.

2-28. EMERGENCY STOP

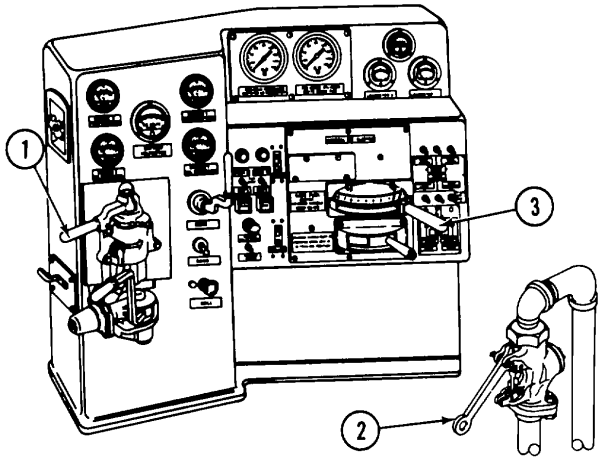

CAUTION

Before resuming operation after an emergency brake application, inspect equipment for possible damage. Make sure all brakes apply and release properly. To stop the train in the shortest possible time (to save life or avoid an accident), move automatic brake valve handle (1) quickly to the EMERGENCY position or trip emergency brake valve (2), and move throttle handle (3) to IDLE position.

2-29. MULTIPLE-UNIT OPERATION

a. Description.

(1) Two or more locomotives equipped for multiple-unit operation may be handled by a single operator if connections are properly made. In addition to the conventional coupling of locomotive drawgear and air lines, the electrical control circuits of the locomotives must be connected with a jumper which plugs into the receptacles at the ends of the locomotives. ,

(2) Controls are then set so that power and brakes on all locomotives are controlled from one cab. The controlling locomotive is the leading unit, and any coupled locomotives are trailing units.

2-29. MULTIPLE-UNIT OPERATION (cont)

(3) Certain alarm and protective devices, and auxiliary controls such as sanding, are connected through the jumper, but the power plants and heavy duty circuits of the coupled units remain entirely independent of each other.

b. Coupling.

CAUTION

The 80-ton locomotive can only be hooked up in multiple-unit operation with another same model 80-ton locomotive.

(1) Couple locomotives mechanically in the usual manner. Refer to paragraph 2-18.

(2) Connect trainline hoses as follows:

Brake Pipe	to Brake Pipe
M. R. Equalizing Pipe	to M. R. Equalizing Pipe
Actuating Pipe	to Actuating Pipe
Independent Application and Release Pipe	to Independent Application and Release Pipe

(3) Open cutout cocks at the ends of air lines on both units.

CAUTION

To protect multiple-unit control jumper from damage, position it up and out of the way of the drawbar.

(4) Connect multiple-unit control jumper (1) to both units. Push each plug all the way into its receptacle and lock in place.

c. Starting.

NOTE

Check that the PMCS has been performed on both units.

(1) Determine which locomotive is to be the trailing unit and, if not already started, start in accordance with paragraphs 2-10 and 2-11.

(2) Set controls on trailing unit as follows:

(a) Cutoff pilot valve (2) to OUT.

(b) Double-ported cutout cock (3) to CLOSED position.

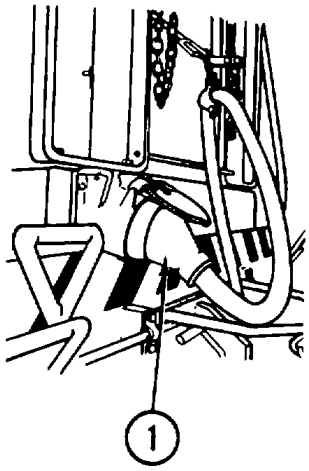

2-29. MULTIPLE-UNIT OPERATION (cont)

(c) Automatic brake valve (4) to HANDLE-OFF position and independent brake valve (5) to RELEASE position. Remove both handles.

(d) Reverser handle (6) to NEUTRAL position and remove handle.

(e) Throttle handle (7) to IDLE.

(f) MU HEADLIGHT SETUP switch (8) to TRAIL UNIT FRONT or TRAIL UNIT REAR position, as appropriate.

(g) Release handbrake (9).

(3) Return to lead locomotive and, if not already started, start in accordance with paragraphs 2-10 and 2-11.

(4) Set controls on lead unit as follows:

(a) MU HEADLIGHT SETUP switch (8) to LEAD UNIT FRONT or LEAD UNIT REAR position as appropriate.

(b) Set handbrake (9).

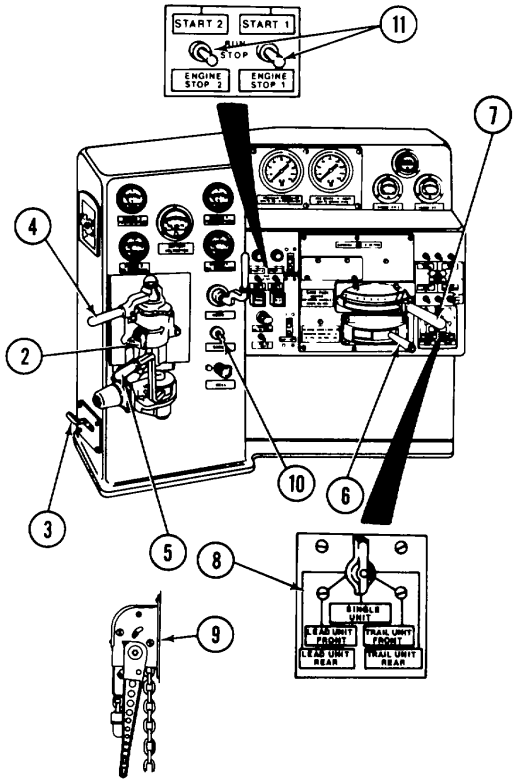

d. Operating.

(1) In multiple-unit operation, all connected locomotives are controlled from one cab. The controlling locomotive is handled in the same manner as operating a single unit. If the lead unit experiences low oil pressure or cooling system overheating, the engine system buzzer in the lead unit will sound. If a trailing unit experiences these conditions, the engine system buzzer in the affected unit will sound and the multiple-unit engine system warning bell in the lead unit will sound.

(2) Make the following checks:

(a) Set independent brake valve (5) to RELEASE. Make a 10-psi reduction with automatic brake valve (4). Check that brakes on both units set. Set automatic brake valve to RELEASE. Check that brakes on both units release. Set independent brake valve to FULL APPLICATION.

2-29. MULTIPLE-UNIT OPERATION (cont)

(b) Push sand control (10). Check that both units deliver sand to the rails.

(c) Set throttle handle (7) to position 3. Check that both units increase in power.

(3) Release handbrake (9) and operate as required.

e. Changing operating cab.

(1) In the cab which has been controlling, set controls as follows:

(a) Set throttle handle (7) to IDLE.

(b) Set automatic brake valve (4) to FULL SERVICE.

(c) Set cutoff pilot valve (2) to OUT position.

(d) Set automatic brake valve (4) to HANDLE-OFF position and independent brake valve (5) to RELEASE position. Remove both handles.

(e) Set reverser handle (6) to NEUTRAL position and remove handle.

(f) Set double-ported cutout cock (3) to CLOSED position.

(g) Set MU HEADLIGHT SETUP (8) to TRAIL UNIT FRONT or TRAIL UNIT REAR position, as appropriate.

(2) In the cab which has been trailing, set control as follows:

(a) Install automatic brake valves (4) and independent brake valve (5). Move automatic brake valve to FULL SERVICE position. Move independent brake valve to RELEASE position.

(b) Set cutoff pilot valve (2) to OUT position.

(c) Set reverser handle (6) to NEUTRAL position and remove handle.

(d) Set double-ported cutout cock (3) to CLOSED position.

(e) Set MU HEADLIGHT SETUP (8) to TRAIL UNIT FRONT or TRAIL UNIT REAR position, as appropriate.

f. Stopping. To stop engines of any one locomotive when operating with multiple units, place ENGINE STOP 1 and ENGINE STOP 2 switches (11) in STOP position.

g. Uncoupling.

(1) Disconnect multiple-unit control jumper from both units.

(2) Uncouple mechanically in accordance with paragraph 2-19.

Section IV. OPERATION OF AUXILIARY EQUIPMENT

2-30. OPERATION OF FIRE EXTINGUISHER

WARNING

- **Should a fire develop on the locomotive, do not breathe fumes from carbon dioxide fire extinguishers. Fumes are toxic.**

- **The extinguisher contains gas under pressure and must never be dropped, handled roughly, or exposed to extreme heat. The gas is nonpoisonous, but can cause suffocation. Spaces in which this gas has been discharged must be ventilated thoroughly before they are reentered by the operating personnel.**

NOTE

The locomotive has three fire extinguishers. One is in the cab below the handbrake. One is attached to the third door back on the left front engine compartment. The third is attached to the second door back on the right rear engine compartment.

a. Remove fire extinguisher (1) from bracket (2).

b. Hold extinguisher upright. Break seal (3) and pull safety pin (4). Point nozzle (5) toward base of fire.

c. Press top lever (6) and discharge chemical at base of fire with a side-to-side motion of the nozzle.

d. After using fire extinguisher (1), notify unit maintenance that you need a replacement for the used extinguisher.

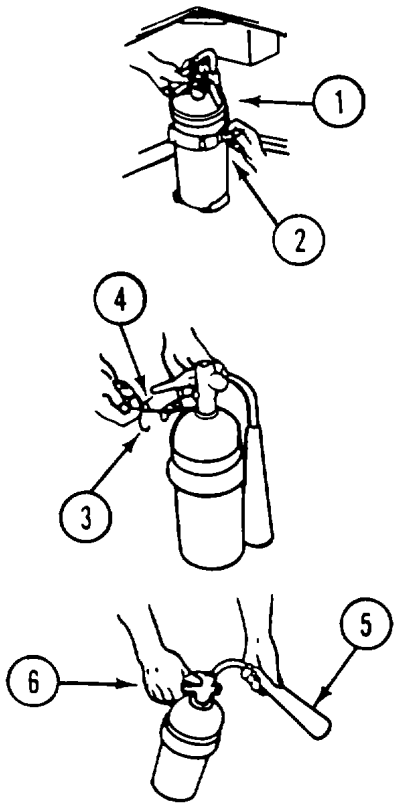

Section V. OPERATION UNDER UNUSUAL CONDITIONS

2-31. OPERATION IN EXTREME HEAT

Operation in extreme heat puts an added load on the cooling system and necessitates special lubrication and battery care procedures.

a. Lubrication. Refer to LO 55-2210-224-12 for proper grade of lubrication.

b. Cooling System.

(1) Check coolant level more frequently. Make sure the fan is operational and no debris clogs radiator.

(2) Check radiator hoses for signs of deterioration. Make sure there are no leaks around hose clamps or drain plugs.

(3) Check radiator for leaks.

(4) During operation, check temperature gage frequently for signs of overheating (above 195°F [91°C]).

c. Batteries. Water in storage batteries evaporates rapidly in high temperature. Have unit maintenance personnel check batteries frequently and replenish with distilled water (item 4, app E).

2-32. OPERATION IN EXTREME COLD

a. Lubrication. Refer to LO 55-2210-224-12 for proper grade of lubrication.

b. Cooling System.

(1) Have unit maintenance personnel check coolant to see that the proper protection is afforded for the lowest possible temperature anticipated.

(2) Check radiator hoses for signs of deterioration. Make sure there are no leaks around hose clamps or drain plugs. Check radiator for leaks.

c. Fuel Tank. Drain fuel tank daily as follows:

(1) Open drain valve in bottom of fuel tank.

(2) Allow water and sediment to drain into a container.

(3) Close drain valve.

(4) Wipe up spills.

(5) After operation, fill tank.

2-32. OPERATION IN EXTREME COLD (cont)

d. Batteries. Have unit maintenance personnel check the electrolyte and add distilled water (item 4, app E) if necessary to 1/8 inch (3.2 mm) below the bottom of the cover filling tubes. Check and add water just before the locomotive goes into service, so the water will have time to mix with the electrolyte before locomotive shutdown.

e. Starting. Heating of jacket water and crankcase oil or use of extra battery capacity may be required to assist starting in extreme cold. Connect water jacket heater cable as follows:

(1) Connect female connector to water jacket heater receptacle.

(2) Connect male connector to 240 V ac power source.

(3) Heat water until water temperature reaches 50°F (lOC).

f. Engine shutdown.

(1) If the engine is to be shut down and the cooling system is not adequately protected with antifreeze solution, the entire system will have to be drained.

(2) When the locomotive is to be shut down for an extended period in freezing weather, have unit maintenance personnel check the specific gravity of the batteries (para 4-30). Fully charged batteries can withstand temperatures as low as -35°F (-37°C). Take hydrometer readings frequently.

2-33. OPERATION IN DUSTY OR SANDY AREAS

Operation in dusty or sandy areas requires more frequent cleaning and servicing of filters to prevent dust entering engine, air compressor, generator, traction motors, and fuel system. Dust buildup on major components increases chance of entry into internal areas and interferes with adequate cooling. Pay particular attention to the following service areas:

a. Lubrication.

(1) Refer to LO 55-2210-224-12. Shorten service interval as required.

(2) Clean areas around lubrication fittings, fill ports, dip sticks, breathers, and filters before servicing or inspection.

(3) Have unit maintenance personnel service engine oil filter and fuel filters frequently.

b. Cooling System.

(1) Keep radiator and radiator grille clean and free of dirt and debris.

(2) Check hose connections for leaks.

(3) Check for debris, dust, and sand clogging radiator fins and radiator grille.

2-33. OPERATION IN DUSTY OR SANDY AREAS (cont)

c. Fuel System.

(1) Keep fuel tank filler cap securely tightened. Wipe dirt from cap and surrounding area before filling or checking fuel level.

(2) Clean engine air cleaner and breather caps daily, or more often, in extremely dusty conditions.

(3) If refueling is required, use a fine wire mesh or a piece of lint-free cloth to screen out impurities.

2-34. OPERATION IN RAINY OR HUMID CONDITIONS

a. Lubrication. Refer to LO 55-2210-224-12. Be sure to clean grease fitting prior to lubricating.

b. Cooling System. Normally, rain and high humidity tend to increase efficiency of a cooling system. However, high humidity may accelerate accumulation of dirt and debris on cooling surfaces of radiator. Keep clean and free of dirt accumulation.

c. Electrical System. High humidity tends to increase corrosion of battery terminals and cause electrical leakage across top of batteries. Keep terminals well coated with petrolatum (item 19, app E). Keep tops and sides of batteries clean and dry.

d. Fuel System. High humidity accelerates condensation of water in fuel tanks. Condensation can be kept to a minimum by keeping fuel tanks filled at all times when locomotive is not in operation. Fill fuel tank daily, immediately after operation. Wait 2 to 5 minutes for fuel to settle, then drain any accumulated water from fuel tank. Have unit maintenance personnel service fuel filters frequently to remove collected water.

e. Locomotive Body. Clean and spot paint rusted areas of locomotive.

2-35. OPERATION IN SALTWATER AREAS

Corrosion of metal is greatly accelerated in saltwater areas. Humid, salty atmosphere also damages electrical components. In these areas, the following procedures must be observed:

a. Bare Metal Surfaces. Keep exposed metal surfaces painted. Coat exposed wear areas, such as cylinder rods, with lubricating oil, grease, or preservative compound, when not in use. Follow lubrication procedures regularly. Clean and spot paint rusted areas on locomotive.

b. Fuel System. Keep fuel tanks full when locomotive is not in use. Have unit maintenance personnel service fuel filters frequently to remove collected water. Service engine air cleaner frequently.

2-36. OPERATION AT HIGH ALTITUDE

The locomotive is designed to operate efficiently to a height of about 8,000 feet (2 438. 4 meters). However, because air pressure decreases with an increase in altitude, maximum available power and engine performance decreases with increased altitudes. Keep engine air filters clean for the least resistance to flow of intake air. Keep radiator clean for maximum dissipation of power train heat.

2-37. RUNNING THROUGH WATER

WARNING

Road bed shall be inspected prior to crossing submerged areas. Equipment damage and injury or death to personnel could occur if road bed is damaged.

CAUTION

Water deeper than 3 inches (76 mm) above top of rail will cause damage to traction motors. Never run through water that is deep enough to contact the traction motor frames. When passing through water, proceed at a speed of between 2 to 3 mph (3 to 5 km/h).

2-38. RERAILING

Refer to FM 55-20, Army Rail Transport Units and Operation, for instructions for rerailing.

2-39. CUTTING OUT TRACTION MOTORS

If electrical failure occurs in a traction motor, it may be taken out of service by shutting down the engine which generates power for that motor. Shutting down an engine cuts power to the two motors for which that engine generates power.

2-40. TOWING LOCOMOTIVE DEAD

a. If a dead locomotive is to be towed behind a live lead unit, set the controls as follows:

(1) Place throttle handle (1) to IDLE position and reverser handle (2) to NEUTRAL position. Remove reverser handle.

(2) Place automatic brake valve (3) to HANDLE-OFF position and the independent brake valve (4) to RELEASE position. Remove both handles.

(3) Place the cutoff pilot valve (5) to OUT position and set all circuit breakers and switches to OFF.

(4) Couple all brake system hoses between live and dead unit.

(5) Set dead engine valve (6) to OPEN position.

2-40. TOWING LOCOMOTIVE DEAD (cont)

(6) Set double-ported cutout cock (7) to OPEN position.

(7) Release handbrake (8).

b. If locomotive is to be towed dead in a train, set the controls as follows:

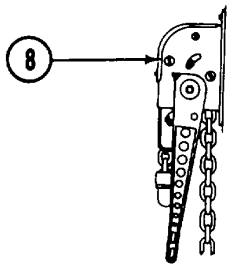

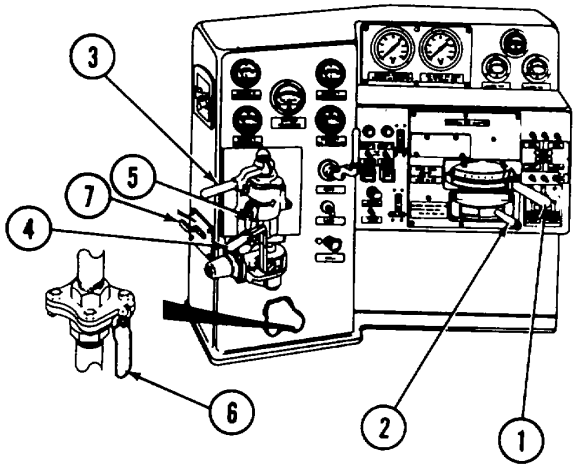

(1) Place the throttle handle (1) to IDLE position and reverser handle (2) in NEUTRAL position and remove from controller panel.

(2) Place automatic brake valve (3) to HANDLE-OFF position and remove handle.

(3) Place independent brake valve (4) to RELEASE position and remove handle.

(4) Place cutoff pilot valve (5) to OUT position.

(5) Set all circuit breakers and switches to OFF.

(6) Place double-ported cutout cock (7) to OPEN position.

(7) Place dead engine valve (6) to OPEN position.

(8) Have intermediate direct support maintenance personnel set safety valve on distributing valve to 25 psi (172 kPa) and connect brake pipe hoses only.

(9) Couple front and rear brake pipe hoses only between live and dead units.

c. Uncoupling dead locomotive.

(1) Set handbrake (8) on dead locomotive.

(2) Uncouple (para 2-19).

CHAPTER 3

OPERATOR MAINTENANCE INSTRUCTIONS

Section I. LUBRICATION INSTRUCTIONS

3-1. GENERAL

Refer to LO 55-2210-224-12 for materials and instructions to be used for lubrication of the locomotive.

Section II. OPERATOR TROUBLESHOOTING PROCEDURES

3-2. INTRODUCTION

a. To find the troubleshooting procedures you need, use the symptom index. Components and symptoms are listed alphabetically. Common malfunctions are listed alphabetically under those component or system headings.

b. Table 3-1 lists the common malfunctions which you will find during the operation or maintenance of the locomotive or its components. You should perform the tests/inspections and corrective actions in the order listed.

c. This manual cannot list all malfunctions that may occur, nor all tests or inspections and corrective actions. If a malfunction is not listed, or is not corrected by listed corrective action, notify unit maintenance.

NOTE

All applicable operating checks should be performed before doing troubleshooting procedures in table 3-1.

Wiring schematics are located in Appendix G.

SYMPTOM INDEX

Symptom	Troubleshooting Procedure Page
AIR COMPRESSOR	
Compressor fails to pump air	3-3
Insufficient air pressure as shown by low air pressure gages	3-3
AUXILIARY ELECTRICAL SYSTEM	
Battery voltmeter shows discharge	3-3
BRAKE SYSTEM	
Handbrake will not apply	3-4
Locomotive brakes will not apply	3-4
ELECTRICAL INSTRUMENTS AND CONTROLS	
Locomotive does not respond to throttle	3-4
ENGINE	
Engine cranks but fails to start	3-5
Engine does not crank	3-5
Engine overheats	3-6
Engine stops while in operation	3-6
Engine will not respond to throttle	3-7
Engine will not shut off when ENGINE STOP switch is set to STOP position	3-7

Table 3-1. Operator Troubleshooting

MALFUNCTION
TEST OR INSPECTION
CORRECTIVE ACTION

AIR COMPRESSOR

1. COMPRESSOR FAILS TO PUMP AIR.

Step 1. Check for leaking air hoses or gaskets.

Tighten air hoses. If leaks still exist, notify unit maintenance.

Step 2. Check for leaking angle or drain cocks.

Tighten connections. If leaks still exist, notify unit maintenance.

Step 3. Check for bad compressor valve, causing excessive operation and overheating.

Notify unit maintenance.

Step 4. Check for broken, loose, or stretched air compressor belts.

Notify unit maintenance.

2. INSUFFICIENT AIR PRESSURE AS SHOWN BY LOW AIR PRESSURE GAGES.

Step 1. Check for low pressure buildup.

Allow time for pressure buildup.

Step 2. Check for open air reservoir drain cocks.

Close drain cocks securely.

Step 3. Check for loose connections in all lines.

Tighten loose connections. If leaks still exist, notify unit maintenance.

AUXILIARY ELECTRICAL SYSTEM

3. BATTERY VOLTMETER SHOWS DISCHARGE.

Check for loose or broken alternator drive belts.

Notify unit maintenance.

Table 3-1. Operator Troubleshooting (continued)

MALFUNCTION
TEST OR INSPECTION
CORRECTIVE ACTION

BRAKE SYSTEM

4. HANDBRAKE WILL NOT APPLY.

Step 1. Check for defective handbrake.

Notify unit maintenance.

Step 2. Check for broken chain.

Notify unit maintenance.

Step 3. Check for defective rollers or pins.

Notify unit maintenance.

5. LOCOMOTIVE BRAKES WILL NOT APPLY.

Step 1. Check for insufficient build up of air pressure.

Idle engine until air pressure builds up.

Step 2. Check for open air cock.

Close air cock.

Step 3. Check for an air leak.

Notify unit maintenance.

Step 4. Check for out-of-adjustment brake cylinder piston travel.

Notify unit maintenance.

ELECTRICAL INSTRUMENTS AND CONTROLS

6. LOCOMOTIVE DOES NOT RESPOND TO THROTTLE.

Step 1. Check for reverser handle in the NEUTRAL position.

Place reverser handle in direction of desired travel.

Step 2. Check for improper release of the handbrake, independent airbrake valve, or automatic brake valve.

Release applied brake(s).

Table 3-1. Operator Troubleshooting (continued)

MALFUNCTION TEST OR INSPECTION CORRECTIVE ACTION

ENGINE

7. ENGINE CRANKS BUT FAILS TO START.

Step 1. Check for empty fuel tank.

WARNING

Fuel is very flammable and can explode easily. To avoid serious injury or death, keep fuel away from open fire and keep fire extinguisher within easy reach when working with fuel. Do not work on fuel system when engine is hot. Fuel can be ignited by hot engine. Shut off engine and do not smoke while refueling.

Fill fuel tank with diesel fuel (item 16 or 17, app E).

Step 2. Check for oil pressure below 15 psi (103 kPa).

Notify unit maintenance.

Step 3. Check for low battery fluid.

Notify unit maintenance.

8. ENGINE DOES NOT CRANK.

Step 1. Check for improper position of battery switch.

Set switch to CLOSED position.

Step 2. Check for improper position of control circuit breaker.

Set circuit breaker switch to ON position.

Step 3. Check for improper position of ENGINE STOP switch.

Set ENGINE STOP switch to RUN.

Step 4. Check for improper position of throttle.

Set throttle to IDLE position.

Table 3-1. Operator Troubleshooting (continued)

MALFUNCTION TEST OR INSPECTION CORRECTIVE ACTION

8. ENGINE DOES NOT CRANK. (cont)

Step 5. Check for improper position of reverser handle.

Set reverser handle to NEUTRAL position.

Step 6. Check for improper position of EMER SHUTDOWN switch.

Set EMER SHUTDOWN switch to RUN.

9. ENGINE OVERHEATS.

Step 1. Check for improper operation of radiator fan.

Notify unit maintenance.

Step 2. Check for low coolant.

Notify unit maintenance.

Step 3. Check for obstruction in radiator.

Remove obstruction.

10. ENGINE STOPS WHILE IN OPERATION.

Step 1. Check for low engine oil level.

Notify unit maintenance.

Step 2. Check for improper position of both EMER SHUTDOWN switches.

Set to RUN position.

Step 3. Check for empty fuel tank.

WARNING

Fuel is very flammable and can explode easily. To avoid serious injury or death, keep fuel away from open fire and keep fire extinguisher within easy reach when working with fuel. Do not work on fuel system when engine is hot. Fuel can be ignited by hot engine. Shut off engine and do not smoke while refueling.

Fill fuel tank with diesel fuel (item 16 or 17, app E).

Table 3-1. Operator Troubleshooting (continued)

MALFUNCTION TEST OR INSPECTION CORRECTIVE ACTION
11. ENGINE WILL NOT RESPOND TO THROTTLE.
Step 1. Check for overheating indication on engine temperature gages.
Check for reason for overheating (malfunction 9). After problem has been corrected, allow engine to cool.
Step 2. Check for lit GROUND light.
Push GROUND RELAY RESET button.
12. ENGINE WILL NOT SHUT OFF WHEN ENGINE STOP SWITCH IS SET TO STOP POSITION.
Check for OPEN battery switch.
Set battery switch to CLOSE.

Section III. OPERATOR/CREW MAINTENANCE PROCEDURES

3-3. GENERAL

There are no maintenance procedures that the operator/crew is authorized to perform on the 80-ton, diesel-electric locomotive.

CHAPTER 4

UNIT MAINTENANCE INSTRUCTIONS

Section I. REPAIR PARTS, SPECIAL TOOLS, TMDE, AND SUPPORT EQUIPMENT

4-1. COMMON TOOLS AND EQUIPMENT

For authorized common tools and equipment, refer to the Modified Table of Organization and Equipment (MTOE) applicable to your unit.

4-2. SPECIAL TOOLS, TMDE, AND SUPPORT EQUIPMENT

No special tools are required by unit maintenance for the maintenance of the locomotive. Test, measurement, and diagnostic equipment (TMDE) and support equipment include standard equipment found in any unit maintenance shop.

4-3. REPAIR PARTS

Repair parts are listed and illustrated in TM 55-2210-224-24P, Repair Parts and Special Tools List, covering unit maintenance for this locomotive and in TM 5-2815233-24P for the engine.

Section II. SERVICE UPON RECEIPT

4-4. GENERAL

Upon receipt of the locomotive, you must determine if the locomotive has been properly prepared for service. Inspect the equipment as follows:

a. Inspect assemblies, subassemblies, and accessories to be sure they are in proper working order.

b. Secure, clean, lubricate, or adjust as needed.

c. Check Basic Issue Items to be sure every item is present, in good condition, properly mounted, or stowed.

d. Inspect the equipment for damage incurred during shipment. If the equipment has been damaged, report the damage on SF Form 364, Report of Discrepancy (ROD).

e. Check the equipment against the packing slip to see if the shipment is complete. Report discrepancies in accordance with the instructions of DA PAM 738-750.

4-5. RADIO INTERFERENCE SUPPRESSION

There are no radio interference suppression systems on this locomotive.

Section III. UNIT PREVENTIVE MAINTENANCE CHECKS AND SERVICES (PMCS)

4-6. INTRODUCTION TO UNIT PREVENTIVE MAINTENANCE CHECKS AND SERVICES

Unit preventive maintenance checks and services are listed in table 4-1. Observe the following:

a. Items to be inspected are indicated by a black dot in the appropriate column.

b. If your equipment fails to operate, troubleshoot with proper equipment. Report any deficiencies as appropriate using the proper forms as specified in DA PAM 738-750.

c. If you find a faulty condition that you are not authorized to correct, notify intermediate direct support maintenance.

Table 4-1. Unit Preventive Maintenance Checks and Services

W - Weekly **M - Monthly** **Q - Quarterly**

Item No.	Interval W	Interval M	Interval Q	Item to be Inspected	Procedures
1			●	Couplers	Inspect couplers for cracks, sheared or worn pins, and missing parts. Check for a height of between 32.5 and 34.5 inches (825.5 and 876.3 mm) from top of the rails to center line of the knuckle. Use a wear limit gage and check coupler knuckle for wear to determine serviceability. Lubricate in accordance with LO 55-2210-224-12.
2			●	Truck Assembly	a. Inspect pedestal liners for cracks, wear, and damage. Lubricate in accordance with LO 55-2210-224-12.
			●		b. Inspect side bearing for 1/2-inch clearance.
			●		c. Inspect axle lateral for 1/8-inch clearance.
			●		d. Inspect truck frame springs for cracks and breaks.
			●		e. Inspect truck frame and bolster for cracks.
3			●	Foundation Brake	Inspect foundation brake lever pins, bushings, and devises for wear and damage. Inspect brakeshoes for damage and excessive wear (minimum 3/4 inch). Lubricate in accordance with LO 55-2210-224-12.
4	●			Brake Cylinder	Inspect brake cylinder for wear and damage. Check for piston travel of from 3 to 6 inches (76.2 to 152.2 mm). Lubricate in accordance with LO 55-2210-224-12.
5			●	Air Reservoir	Inspect air reservoirs for cracks, breaks, and damage.
6			●	Traction Motor Assembly	a. Inspect traction motor mounts for damaged pads.
			●		b. Remove brush covers and inspect interior for grit, dust, and dirt.

Table 4-1. Unit Preventive Maintenance Checks and Services (continued)

W - Weekly **M - Monthly** **Q - Quarterly**

Item No.	Interval W	Interval M	Interval Q	Item to be Inspected	Procedures
6 (cont)					**WARNING** Compressed air used for cleaning purposes will not exceed 30 psi (207 kPa). Do not direct compressed air against skin. Use goggles or full face shield.
			●		c. Service traction motor assembly by blowing out with dry compressed air. Lubricate in accordance with LO 55-2210-224-12.
			●		d. Inspect brush holders and brushes for grit and dirt. Check that brushes do not stick in holders. Check for proper spring pressure (para 4-46). Check for minimum brush length of 1-1/4 inches (31.75 mm).
			●		e. Check that the brush pressure springs will not come to within 1/8 inch (3.2 mm) of frame before next inspection.
			●		f. Check lubricant levels. Refer to LO 55-2210-225-12.
7			●	Axle and Roll-er Bearing	a. Check axle for cracks, breaks, and damage.
			●		b. Check roller bearing housings for leakage, cracks, and loose cap bolts.
8			●	Wheels	Check wheels for cracks and breaks. Use a gage and check wheels for wear and looseness.
9		●		Fuel Tank and Fuel Level Gage	a. Check fuel tank for cracks, breaks, and leakage.
	●				b. Service fuel tank by draining water or sediment from fuel tank sump.
	●				c. Check for clogged strainer and loose filler cap.
		●			d. Check for broken fuel level gage. Clean fuel level gage and check for proper fuel level indication.

Table 4-1. Unit Preventive Maintenance Checks and Services (continued)

W - Weekly **M - Monthly** **Q - Quarterly**

Item No.	Interval W	M	Q	Item to be Inspected	Procedures
10			●	Emergency shut-down Switch	Test switch to make sure it works properly.
11			●	Fuel Systems Lines and Fittings	Inspect fuel lines for breaks, cracks, or other damage. Check lines, hoses, and fittings for tightness. Check for leakage.
12		●		Storage Batteries and Battery Compartment	a. Test batteries in accordance with paragraph 4-30. Check that batteries are charged and electrolyte level is correct. Check cables for corrosion, breaks, frays, and damage. Make sure terminals are secure. Lubricate in accordance with LO 55-2210-224-12.
			●		b. Clean and paint battery compartment as required.
13			●	Sand Controllers, Sander Control Valves, and Sandbox	a. Inspect sand controllers for broken welds and cracks. Make sure valves are mounted securely.
	●				b. Remove bottom plug and the quick-disconnect flange and clean the interior.
	●				c. Inspect sander control valves for proper operation.
	●				d. Clean the sander control valve by pushing the automatic cleanout jets.
	●				e. Inspect sandbox for cracks and breaks. Service sandbox by removing wet sand, cleaning box and replacing with dry sand.
14			●	Sander Hose and Bracket	Inspect sander hose for cracks, breaks, and deterioration. Inspect bracket for cracks, breaks, and security of mounting.
15	●			Brake System Valves, Gages, Cutout Cocks, and Strainers	a. Check brake system valves and gages for proper operation and security of mounting.
	●				b. Check independent and automatic brake valve handles.
	●				c. Check cutout cocks for proper operation.
	●				d. Remove and clean strainers.

Table 4-1. Unit Preventive Maintenance Checks and Services (continued)

W - Weekly **M - Monthly** **Q - Quarterly**

Item No.	Interval W	Interval M	Interval Q	Item to be Inspected	Procedures
16	●			Trainline Air Hoses and Fittings	Inspect trainline air hoses and fittings for breaks, cracks, and damage. Check for leakage and tighten fittings as required.
17			●	Multiple-unit Control Jumpers	Check Mulitple-unit control jumpers for breaks and frayed wires and for loose connections.
18			●	Multiple-unit Control and Engine Jacket Heater Recept-acle.	Check receptacles for cracks, breaks, and damage. Check terminals for corrosion and loose contacts. Check covers and springs for damage.
19			●	Resistors and Shunt Devices	Inspect resistors and shunt devices for broken porcelain, loose connections, and open or touching resistance elements.
20			●	Safety Warning Bell Assembly	Remove clapper (para 4-20) and lubricate in accordance with LO 55-2210-224-12. Inspect for wear. Install clapper.
21			●	Wiring	Inspect wiring for cracks, breaks, and deterioration
22			●	Main Generator	a. Remove brush covers and inspect interior for grit, dust, and dirt. **WARNING** Compressed air used for cleaning purposes will not exceed 30 psi (207 kPa). Do not direct com-pressed air against skin. Use goggles or full face shield.
			●		b. Service main generator by blowing out with dry compressed air. Lubricate in accordance with LO 55-2210-224-12.
			●		c. Inspect brush holders and brushes for grit and dirt. Check that brushes do not stick in holders. Check for proper spring pressure (para 4-35). Check for minimum brush length of 1-1/2 inches (38.10 mm).

Table 4-1. Unit Preventive Maintenance Checks and Services (continued)

W - Weekly **M - Monthly** **Q - Quarterly**

Item No.	Interval W	Interval M	Interval Q	Item to be Inspected	Procedures
22 (cont)			●		d. Check that the brush pressure springs will not come to within 1/8 inch (3.2 mm) of frame before next inspection.
23			●	Air Compressor and Drive Pulleys and Belts	a. Inspect air compressor and drive pulleys for proper operation.
			●		b. Service air compressor in accordance LO 55-2210-224-12.
			●		c. Inspect pulley for cracks and breaks and for broken sheaves.
			●		d. Check for loose or missing mounting hardware.
			●		e. Inspect belts for tightness. Check that belts are not cracked, broken, stretched, or damaged.
24			●	Air Compressor Air Cleaner Intake	Inspect for bent, cracked, or damaged air cleaner. Check filter element for dirt and damage. Service filter in accordance with LO 55-2210-224-12.
25			●	Compressor Governor	Check governor for proper operation. Air pressure shall be between 120 and 130 psi (827 and 896 kPa).
26			●	Engine Hood Door	Inspect door for wear, corrosion, broken welds, cracks, and security of mounting. Check door lock for ease of operation and tightness. Service in accordance with LO 55-2210-224-12.
27			●	Handrail, Up-rights, Steps, and Cutter Lever	Inspect parts for wear, corrosion, broken welds, and loose mounting.
28			●	Engine Assembly	Service engine in accordance with LO 55-2210-224-12.
29			●	Exhaust Pipe	Check for plugged or burned-out exhaust pipe.

Table 4-1. Unit Preventive Maintenance Checks and Services (continued)

W - Weekly **M - Monthly** **Q - Quarterly**

Item No.	Interval W	Interval M	Interval Q	Item to be Inspected	Procedures
30			●	Exhaust Muffler Assembly	Check muffler for holes, splits, or damage.
31			●	Multiple-Unit Engine System Warning Bell and Engine System Buzzer	Check warning bell and buzzer for proper operation.
32	●			Cooling System Hoses and Clamps	a. Check hoses for leakage and deterioration.
	●				b. Check clamps for tightness.
33	●			Cooling Fan Belts, and Pulleys	a. Inspect fan for proper operation. Check that blades are not cracked, broken, or damaged.
	●				b. Check for missing or loose mounting hardware.
	●				c. Check screens for damage and loose mounting.
	●				d. Check fan belts for loose adjustment, wear, and deterioration.
	●				e. Check pulleys for cracks, breaks, and damage and for missing or loose mounting hardware.
34			●	Cooling Radiators	a. Check radiators for leaks, clogging, and bent fins.
			●		b. Service radiator by checking coolant level and replenishing with a 50/50 solution of water and antifreeze.
35			●	Cab Seats and Cushions	Check seats and cushions for wear, damage, and loose mounting.
36			●	Armrests	Check armrests for wear, damage, and loose mounting.

Table 4-1. Unit Preventive Maintenance Checks and Services (continued)

W - Weekly **M - Monthly** **Q - Quarterly**

Item No.	Interval W	Interval M	Interval Q	Item to be Inspected	Procedures
37			●	Windshield Wiper Motors, Arms, and	a. Check windshield wiper motor for proper operation.
		●		Blades	b. Check wiper blades for damage and wear.
		●			c. Check wiper arms for looseness and damage.
38		●		Window Glass and Sash	Check window glass for cracks and breaks. Check sash for damage. Check for security of mounting.
39			●	Cab Doors and Locks	Check doors for breaks and damage. Check locks for ease of operation. Check doors for secure closing. Service in accordance with LO 55-2210-224-12.
40			●	Electrical Equip-ment Cabinet Doors	Check doors for breaks and damage. Check handle for ease of operation. Service in accordance with LO 55-2210-224-12.
41			●	Electrical Switches, Circuit Breakers, and	a. Check for proper operation of switches and circuit breakers.
			●	Indicating Lights	b. Check indicating lights for cracked lens. Check for proper operation.
42			●	Transisition Relay Panel	Inspect panel and card wiring for cracks, breaks, and damaged insulation. Check that all wire connections on panel are tight.
43			●	Speed-sensing Alternator	Clean off outside of alternator and inspect leads and connections, where they exit terminal box, to see that they are not damaged.
44	·		●	Pressure Switches	Inspect switches and wiring for loose mounting, damaged insulation and loose connections. Inspect capillary tube for chafing, bends, kinks and loose fittings.
45	●			Electrical Relays and Contactors	Inspect for loose connections, contact burning, and charring of relay coil and insulation.
46			●	Timer	Use multimeter and check timer for proper operation.

Table 4-1. Unit Preventive Maintenance Checks and Services (continued)

W - Weekly **M - Monthly** **Q - Quarterly**

Item No.	Interval W	M	Q	Item to be Inspected	Procedures
47	●			Hand Brake	Inspect for loose screws, nuts, or bolts. Service hand brake in accordance with LO 55-2210-224-12 Check for proper operation.
48	●			Emergency Brake Valve	Check emergency brake valve for proper operation and security of mounting. Test to see that valve operates properly.
49	●			Cab Heater	Check heater for proper operation. Check for loose or missing hardware.
50			●	Controller Mechanism	a. Check throttle for proper operation. Move handle from IDLE to position 8 while listening for roller switches to snap into each notch.
	●				b. Check reverser for proper operation.
51	●			Gages and Instruments	Check gages and instruments for proper operation.

Section IV. UNIT TROUBLESHOOTING

4-7 GENERAL.

This section contains testing and troubleshooting information for locating and correcting most of the operating troubles which may develop in the locomotive. Each malfunction for an individual component, unit, or system is followed by a list of tests or inspections which will help you determine corrective actions. You should perform the test/inspections and corrective actions in the order listed.

4-8 TROUBLESHOOTING PROCEDURES.

The symptom index lists the common malfunctions which you may find during the operation or maintenance of the locomotive or its components. Use the symptom index for quick access to the troubleshooting procedures in table 4-2.

This manual cannot list all possible malfunctions that may occur, nor all tests or inspections and corrective actions. If a malfunction is not listed (except where malfunction and cause are obvious) or is not corrected by listed corrective actions, notify intermediate direct support maintenance.

SYMPTOM INDEX

Symptom	Troubleshooting Procedure Page
AUXILIARY ELECTRICAL SYSTEM	
Failure of battery charging circuit	4-12
COOLING SYSTEM	
Engine overheating	4-13
ELECTRICAL INSTRUMENTS AND CONTROLS	
Faulty operation of electrical contactors	4-14
Faulty operation of interlocks or control fingers	4-14
ENGINE	
Engine cranks but fails to start	4-15
Engine does not crank	4-16
Engine hunts or surges	4-17
Engine skips or misses	4-17
Engine stops while in operation	4-17
LUBRICATING SYSTEM	
Low lube oil pressure	4-18
MAIN GENERATOR	
Main generator flashover	4-18
SANDING SYSTEM	
Sanding system does not work	4-19
LIGHTS	
Headlights do not operate with headlight switch in the ON position	4-19
Cab, cowling, electrical equipment cabinet, and step lights do not operate with switch in the ON position	4-20

Table 4-2. Unit Troubleshooting

MALFUNCTION
TEST OR INSPECTION
CORRECTIVE ACTION

1. FAILURE OF BATTERY CHARGING CIRCUIT

WARNING

- **Remove rings, bracelets, wristwatches, and neck chains before working around the locomotive. Jewelry can catch on equipment and cause injury, or may short across an electrical circuit and cause severe burns or electrical shock.**

- **Be careful not to short out battery terminals. Do not smoke or use open flame near batteries. Batteries may explode from a spark. Battery acid is harmful to skin and eyes.**

Step 1. Check for insufficiently charged batteries.

Charge battery if not fully charged. Replace battery if unable to charge. (para 4-30).

Step 2. Check for dirty or loose battery terminals.

Clean and tighten terminals.

Step 3. Check for loose battery charging alternator belts.

Adjust belts (para 4-34).

Step 4. Check for obvious damage to battery charging alternator.

If defective, refer to TM 5-2815-233-14.

Step 5. Check for brushes worn beyond limits.

If worn refer to TM 5-2815-233-14.

Step 6. Check for defective voltage regulator by checking continuity of voltage regulator.

Refer to TM 5-2815-233-14.

Table 4-2. Unit Troubleshooting (continued)

MALFUNCTION TEST OR INSPECTION CORRECTIVE ACTION

COOLING SYSTEM

2. ENGINE OVERHEATING.

WARNING

Never remove the engine cooling system cap when the engine is hot. This is a high-pressure cooling system, and escaping steam or hot water can cause serious burns.

Step 1. Check for low coolant level.

Fill coolant system.

Step 2. Check for clogged radiator fins.

Clean radiator fins.

Step 3. Check for collapsed cooling system hoses.

Replace hoses (para 4-38).

Step 4. Check for loose or missing cooling fan belts.

Tighten or replace cooling fan belts (para 4-39).

Step 5. Check for proper operation of engine temperature gage.

If faulty, notify intermediate direct support maintenance.

Step 6. Check for defective thermostat.

Refer to TM 5-2815-233-14.

Step 7. Check for clogged radiator grille.

Clean radiator grille.

Table 4-2. Unit Troubleshooting (continued)

MALFUNCTION TEST OR INSPECTION CORRECTIVE ACTION

ELECTRICAL INSTRUMENTS AND CONTROLS

3. FAULTY OPERATION OF ELECTRICAL CONTACTORS.

WARNING

• Remove rings, bracelets, wristwatches, and neck chains before working around the locomotive. Jewelry can catch on equipment and cause injury, or may short across an electrical circuit and cause severe burns or electrical shock.

• Be careful not to short out battery terminals. Do not smoke or use open flame near batteries. Batteries may explode from a spark. Battery acid is harmful to skin and eyes.

Step 1. Check for an air gap.

If there is an air gap, notify intermediate direct support maintenance.

Step 2. Check for closing voltage below 32 V.

If below 32 V, notify intermediate direct support maintenance.

Step 3. Check for binding bearings.

Clean and lubricate as required.

Step 4. Check for dirt or other foreign matter between contacts.

Clean as required.

4. FAULTY OPERATION OF INTERLOCKS OR CONTROL FINGERS.

Check for dirty or gummy interlocks or finger surfaces.

Clean and lubricate interlocks and fingers as required.

Table 4-2. Unit Troubleshooting (continued)

MALFUNCTION TEST OR INSPECTION CORRECTIVE ACTION

ENGINE

5. ENGINE CRANKS BUT FAILS TO START.

Step 1. Check for deenergized fuel magnet valves. Refer to TM 5-2815-233-14.

Notify intermediate direct support maintenance.

WARNING

• Remove rings, bracelets, wristwatches, and neck chains before working around the locomotive. Jewelry can catch on equipment and cause injury, or may short across an electrical circuit and cause severe burns or electrical shock.

• Be careful not to short out battery terminals. Do not smoke or use open flame near batteries. Batteries may explode from a spark. Battery acid is harmful to skin and eyes.

Step 2. Check for discharged battery.

Charge battery if not fully charged (TM 9-6140-200-14). Replace battery if unable to charge (para 4-30).

WARNING

Fuel is very flammable and can explode easily. To avoid serious injury or death, keep fuel away from open fire and keep fire extinguisher within easy reach when working with fuel. Do not work on fuel system when engine is hot. Fuel can be ignited by hot engine. Shut off engine and do not smoke while refueling.

Step 3. Check for low fuel supply.

Service and fill fuel tank with diesel fuel (item 16 or 17, app E).

Step 4. Check for clogged fuel filters.

Clean or replace filters as required.

Table 4-2. Unit Troubleshooting (continued)

MALFUNCTION TEST OR INSPECTION CORRECTIVE ACTION

ENGINE (cont)

6. ENGINE DOES NOT CRANK.

Step 1. Check for incorrect position of switches and controls.

Set switches and controls in correct positions (para 2-10).

WARNING

• Remove rings, bracelets, wristwatches, and neck chains before working around the locomotive. Jewelry can catch on equipment and cause injury, or may short across an electrical circuit and cause severe burns or electrical shock.

• Be careful not to short out battery terminals. Do not smoke or use open flame near batteries. Batteries may explode from a spark. Battery acid is harmful to skin and eyes.

Step 2. Check for dead battery.

Charge battery (TM 9-6140-200-14). Replace battery if unable to charge (para 4-30).

Step 3. Check for cranking contactor not closing.

Notify intermediate direct support maintenance.

Step 4. Check for open circuit at start button, operating coil of cranking contactors, or control switch.

Notify intermediate direct support maintenance.

Step 5. Check for a seized engine, air compressor, or main generator armature.

Notify intermediate direct support maintenance.

Step 6. Check for EMER SHUTDOWN switch in STOP position.

Set EMER SHUTDOWN switch to RUN position.

Table 4-2. Unit Troubleshooting (continued)

MALFUNCTION TEST OR INSPECTION CORRECTIVE ACTION
ENGINE (cont)
7. ENGINE HUNTS OR SURGES.
Refer to TM 5-2815-233-14.
8. ENGINE SKIPS OR MISSES.
WARNING **Fuel is very flammable and can explode easily. To avoid serious injury or death, keep fuel away from open fire and keep fire extinguisher within easy reach when working with fuel. Do not work on fuel system when engine is hot. Fuel can be ignited by hot engine. Shut off engine and do not smoke while refueling.**
Check for water in the fuel.
Drain and refill the entire fuel system and change fuel filters.
Service and fill fuel tank with diesel fuel (item 16 or 17, app E).
9. ENGINE STOPS WHILE IN OPERATION.
WARNING **Fuel is very flammable and can explode easily. To avoid serious injury or death, keep fuel away from open fire and keep fire extinguisher within easy reach when working with fuel. Do not work on fuel system when engine is hot. Fuel can be ignited by hot engine. Shut off engine and do not smoke while refueling.**
Step 1. Check for exhausted fuel supply.
Service and fill fuel tank with diesel fuel (item 16 or 17, app E).
Step 2. Check for broken fuel line.
Repair or replace fuel line (para 4-37).

Table 4-2. Unit Troubleshooting (continued)

MALFUNCTION TEST OR INSPECTION CORRECTIVE ACTION
ENGINE (cont)
9. ENGINE STOPS WHILE IN OPERATION. (cont)
Step 3. Check for air in fuel lines. Bleed and prime fuel system. Refer to TM 5-2815-233-14.
Step 4. Check for improper operation of fuel pump. Refer to TM 5-2815-233-14.
Step 5. Check for any control switch having accidentally been switched to OFF position. Set control switch to ON.
Step 6. Check for EMER SHUTDOWN switch in STOP position. Set EMER SHUTDOWN switch to RUN.
LUBRICATION SYSTEM
10. LOW LUBE OIL PRESSURE.
Step 1. Check for improper lube oil level. Refer to LO 55-2210-224-12.
Step 2. Check for loose or broken oil line. Tighten or replace oil line. (TM 5-2815-233-14)
MAIN GENERATOR
11. MAIN GENERATOR FLASHOVER.
Step 1. Check for rough or eccentric commutator. Notify intermediate direct support maintenance.
Step 2. Check for dirt or foreign particles in insulating spaces between commutator segments. Notify intermediate direct support maintenance.

Table 4-2. Unit Troubleshooting (continued)

MALFUNCTION TEST OR INSPECTION CORRECTIVE ACTION
ENGINE (cont)
11. MAIN GENERATOR FLASHOVER. (cont)
Step 3. Check for worn or broken brushes. Replace brushes (para 4-35).
Step 4. Check for low brush spring tension. Notify intermediate direct support maintenance.
SANDING SYSTEM
12. SANDING SYSTEM DOES NOT WORK.
Step 1. Check for sanding system air cock turned to the OFF position. Turn sanding system air cock to the ON position.
Step 2. Check for empty sandbox. Fill box with sand.
Step 3. Check for wet sand in sandbox. Remove wet sand from sandbox and fill with dry sand.
Step 4. Check for improper operation of sander control valve. Replace defective sander control valve (para 4-27).
Step 5. Check for improper operation of sand controller. Replace defective sand controller (para 4-26).
LIGHTS
13. HEADLAMPS DO NOT OPERATE WITH HEADLIGHT SWITCHES IN THE ON POSITION.
Step 1. Check for a defective headlamp. Replace defective headlamp (para 4-32).
Step 2. Check for a loose connection or broken wire. Tighten loose connection or repair a broken wire.

Table 4-2. Unit Troubleshooting (continued)

MALFUNCTION TEST OR INSPECTION CORRECTIVE ACTION
ENGINE (cont)
13. HEADLAMPS DO NOT OPERATE WITH HEADLIGHT SWITCH IN THE ON POSITION. (cont)
Step 3. Use a multimeter and check for a defective switch.
Replace defective switch (para 4-29).
14. CAB, COWLING, ELECTRICAL EQUIPMENT CABINET, AND STEP LIGHTS DO NOT OPERATE WITH SWITCHES IN THE ON POSITION.
Step 1. Check each light for a defective lamp.
Replace defective lamp (para 4-33).
Step 2. Check each light for a loose connection or a broken wire.
Tighten loose connection or repair broken wire.
Step 3. Use a multimeter and check each light for a defective switch.
Replace defective switch (para 4-29).

Section V. UNIT MAINTENANCE PROCEDURES

4-9 UNIT MAINTENANCE INSTRUCTIONS.

a. General. This section provides instructions for inspection, service, replacement, or repair of assemblies and subassemblies of the locomotive. Each maintenance procedure contains step-by-step instructions for the task to be performed. Where necessary, a final test will be performed on the serviced or repaired item to be sure of minimum performance. Personnel required are listed only if the task requires more than one.

b. Painting. Painting on the locomotive shall be done in accordance with TM 43-0139, Painting Instructions for Field Use.

c. Welding. Welding on the locomotive shall be done in accordance with TM 9-237, Welding Theory and Application.

4-10 TASK SUMMARY.

TASK PARA	PROCEDURE	PAGE NO.
4-11	Engine Hood Door	4-22
4-12	Handrail, Upright, Cutter Lever, and Step	4-25
4-13	Seat and Cushion	4-31
4-14	Armrest	4-33
4-15	Windshield Wiper Motor, Blade, and Arm	4-35
4-16	Window Glass and Sash	4-39
4-17	Cab Door and Lock	4-43
4-18	Side Compartment Door	4-46
4-19	Electrical Equipment Cabinet Door	4-49
4-20	Safety Warning Bell Assembly	4-51
4-21	Multiple-Unit Engine System Warning Bell	4-53
4-22	Engine System Warning Buzzer	4-55
4-23	Horn Assembly	4-57
4-24	Cab Heater Assembly	4-59
4-25	Heater Lines, Hoses, and Fittings	4-64
4-26	Sand Controller	4-68
4-27	Sander Control Valve	4-71
4-28	Sander Hose Assembly	4-73
4-29	Switches, Circuit Breakers, and Indicating Lights	4-74
4-30	Storage Batteries, Connections, and Battery Compartment	4-77
4-31	Multiple-Unit Control Jumper	4-81
4-32	Headlamp	4-82
4-33	Step, Cowling, Gage, and Cab and Electrical Equipment Cabinet Lights and Wiring	4-84
4-34	Battery Charging Alternator Belts (1 of 2)	4-87
4-35	Main Generator Brushes (1 of 2)	4-88
4-36	Exhaust Muffler and Extension Pipe (1 of 2)	4-91
4-37	Fuel System Lines and Fittings	4-94
4-38	Cooling System Hoses and Clamps (1 of 2)	4-97
4-39	Cooling Fan Belts (1 Of 2)	4-99
4-40	Engine Block Heater Clamps and Hoses (1 of 2)	4-100
4-41	Air Compressor Belts (1 of 2)	4-101
4-42	Air Compressor Air Cleaner Intake (1 of 2)	4-103
4-43	Handbrake	4-105
4-44	Trainline Air Hoses and Fittings	4-107
4-45	Foundation Brakeshoe and Brakehead	4-108
4-46	Traction Motor Brushes and Brush Holders	4-110

4-11. ENGINE HOOD DOOR

This task covers:

a. Removal **b. Disassembly** **c. Cleaning**
d. Inspection **e. Repair** **f. Assembly** **g. Installation**

INITIAL SETUP

Tools

Tool kit SC4940-97-CL-E16
Torch outfit 3433-00-026-4718
Welding machine 3432-00-893-3743

Materials/Parts

Drycleaning solvent (Item 23, Appendix E)
Lubricating oil (Item 14, Appendix E)

REMOVAL

NOTE

All hood doors, handles, and locks are removed in a similar manner, except that two hinge halves (16) are welded on compressor compartment doors.

1. Remove three pins (1) and door (2).

DISASSEMBLY

NOTE
Disassemble door handle and latch assembly only if required.

2. Remove cotter pins (3), castle nut (4), and flat washer (5) and remove handle (6).

3. Remove two springs (7) and flat washers (8) and remove latch bars (9) and (10) from lever (11) and guide loops (12).

4. Remove two screws (13) and lockwashers (14) and remove spring (15).

5. If required, drill out spot welds and remove three door hinge halves (16) from door (2). Remove nine nuts (17), lockwashers (18), and screws (19) and remove three hinge halves (20) from hood.

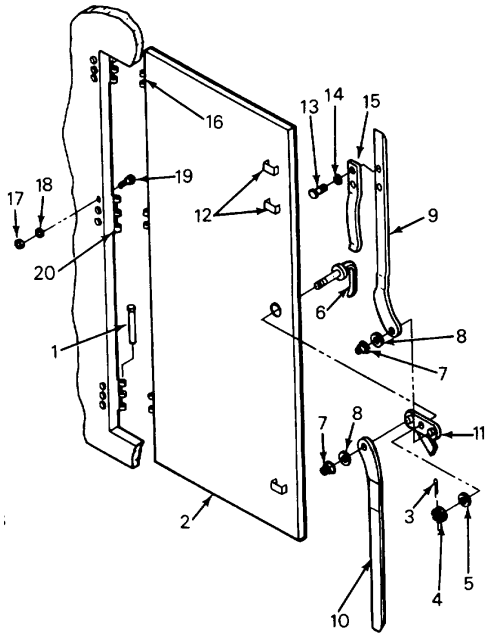

4-11. ENGINE HOOD DOOR

CLEANING, INSPECTION, AND REPAIR

6. Use a stiff brush and remove dirt and sludge deposits.

WARNING

· Drycleaning solvent P-D-680 is toxic and flammable. Wear protective goggles and gloves and use only in a well-ventilated area. Avoid contact with skin, eyes, and clothes and don't breathe vapors. Do not use near open flame or excessive heat. The flash point is 100 - 138°F (38 - 59°C). If you become dizzy, get fresh air and medical aid immediately. If contact with eyes is made, wash your eyes and get medical aid immediately.

· Compressed air used for cleaning purposes will not exceed 30 psi (207 kPa). Do not direct compressed air against skin. Use goggles or full face shield.

7. Use drycleaning solvent and remove grease and oil. Dry with compressed air.
8. Inspect doors and door latches for proper working condition.
9. Inspect door hinge pins (1) and hinge halves (16) and (20) for serviceability.
10. Inspect sheet metal for dents, cracks, or corrosion.
11. Replace missing or damaged parts.
12. Repair metal defects by patching, welding, and grinding smooth. Paint repaired parts.
13. Lubricate latches and hinges with lubricating oil in accordance with LO 55-2210-224-12.

ASSEMBLY

14. Position three hinge halves (20) on hood and install nine screws (19), lockwashers (18), and nuts (17).
15. If removed, position and spot weld three hinge halves (16) on door (2).
16. Position spring (15) on latch bar (9) and install two lockwashers (14) and screws (13).
17. Install latch bars (9) and (10) through guide loops (12) on door (2).

4-11. ENGINE HOOD DOOR

ASSEMBLY (cont)

18. Install ends of latch bars (9) and (10) on pins of lever (11) and install two flat washers (8) and springs (7).
19. Position handle (6) through hole in door (2) and install lever (11) on handle.
20. Install flat washer (5), castle nut (4), and cotter pin (3).

INSTALLATION

21. Position door (2) on frame and insert three pins (1).

4-12. HANDRAIL, UPRIGHT, CUTTER LEVEL, AND STEP

This task covers:

a. Removal **b. Disassembly** **c. Cleaning**
d. Inspection **e. Repair** **f. Assembly** **g. Installation**

INITIAL SETUP

Tools

Tool kit SC4940-97-CL-E16
Torch outfit 3433-00-026-4718
Welding machine 3432-00-893-3743

Material/Parts

Drycleaning solvent (Item 23, Appendix E)

REMOVAL AND DISASSEMBLY

NOTE

All handrails, uprights, cutter levers, and steps are removed in a similar manner.

1. Remove 12 nuts (1), lockwashers (2), bolts (3), and retainers (4) and remove step (5).

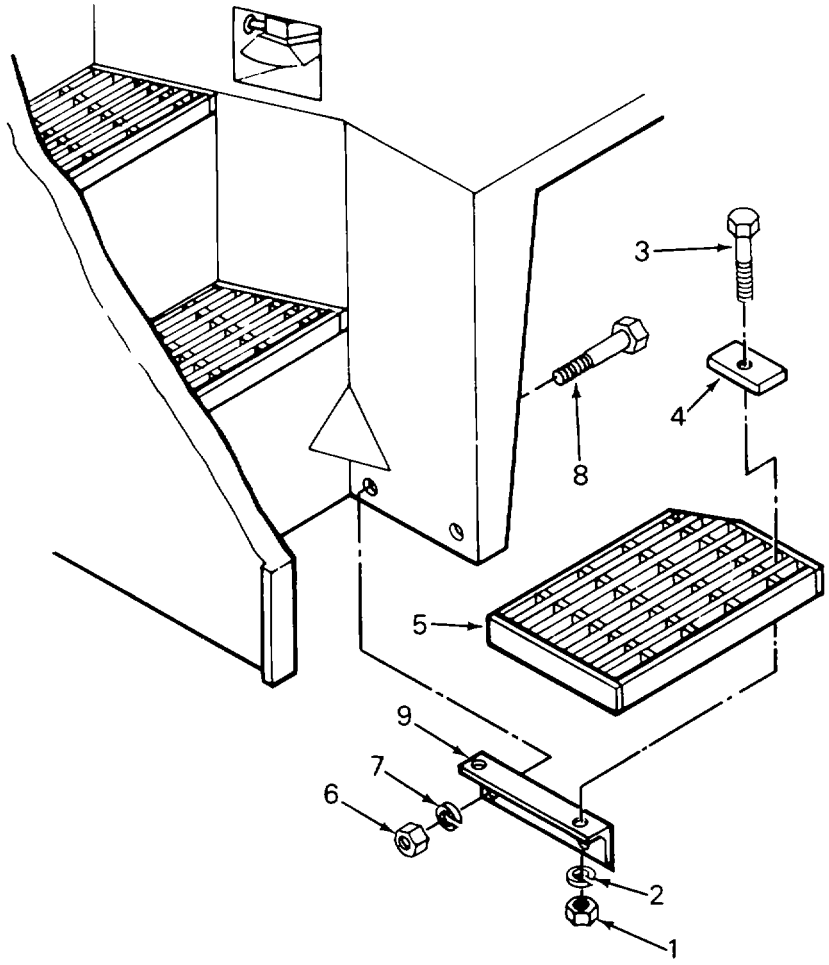

4-12. HANDRAIL, UPRIGHT, CUTTER LEVEL, AND STEP

REMOVAL AND DISASSEMBLY (cont)

2. If necessary, remove 12 nuts (6), lockwashers (7), bolts (8), and 6 angle brackets (9).

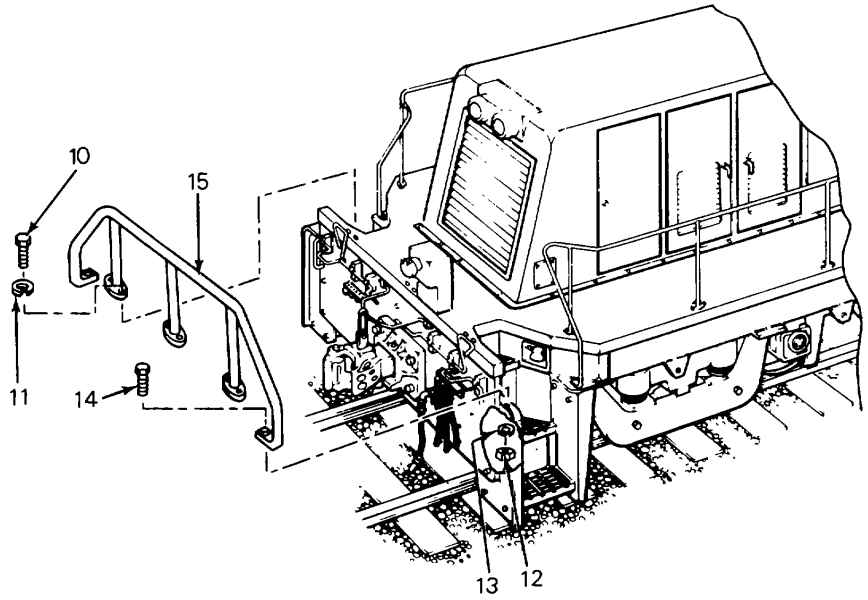

3. Remove nine bolts (10), lockwashers (11), two nuts (12), lockwashers (13), and bolts (14) and remove handrail (15).

4. Remove two bolts (16) and lockwashers (17).

5. Remove nine bolts (18) and lockwashers (19).

6. Remove two nuts (20), lockwashers (21), and bolts (22). Remove handrail (23).

4-12. HANDRAIL, UPRIGHT, CUTTER LEVEL, AND STEP (cont)

REMOVAL AND DISASSEMBLY (cont)

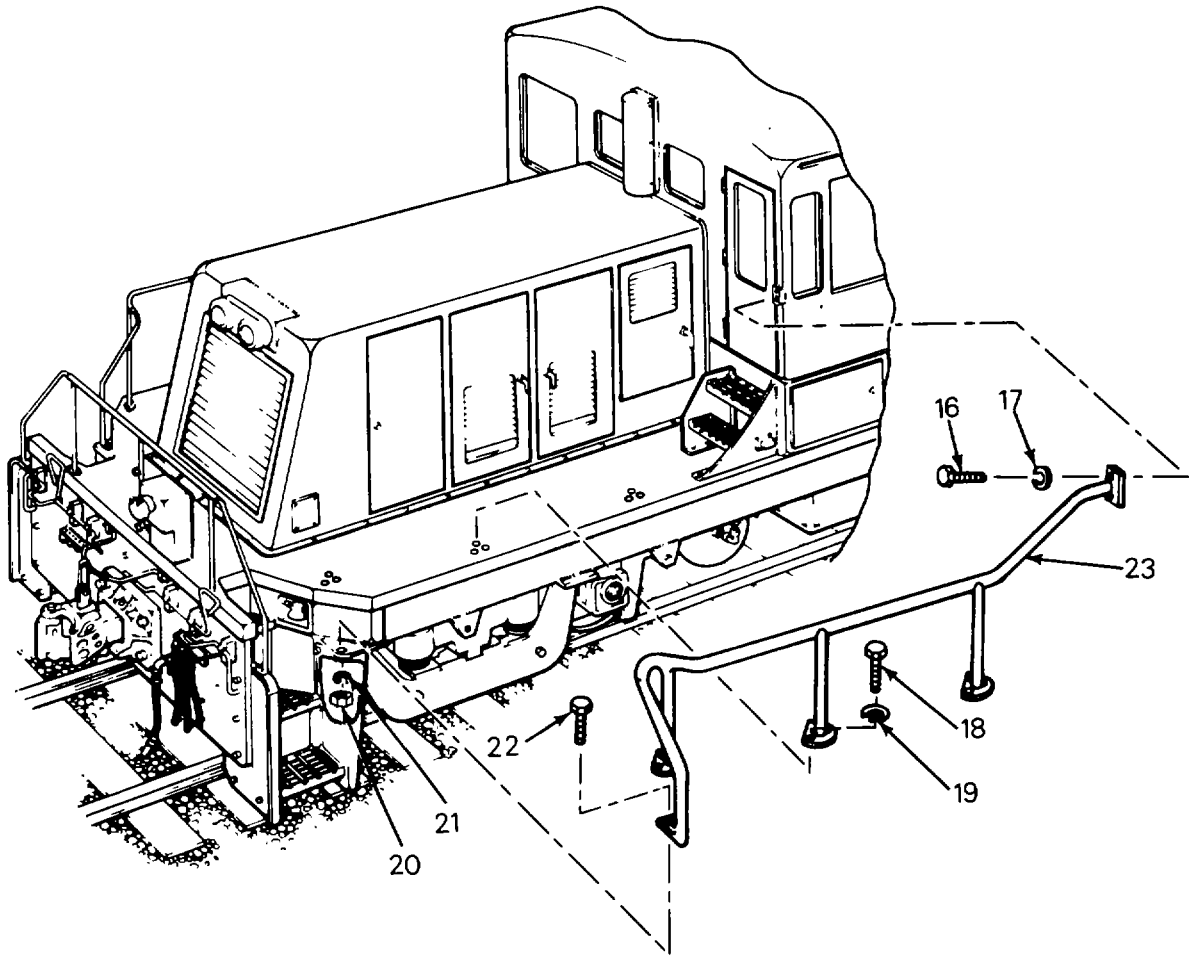

WARNING

Components of this assembly are heavy and may be awkward to handle. Use correct lifting procedures, indicated lifting devices, and/or assistance from other personnel to avoid injury.

7. Remove 12 bolts (24), lockwashers (25), and 6 clamp blocks (26) and remove right cutter lever assembly (27) and left cutter lever assembly (28).

8. Remove cotter pin (29), pin (30), and clevis (31).

4-12. HANDRAIL, UPRIGHT, CUTTER LEVEL, AND STEP (cont)

REMOVAL AND DISASSEMBLY (cont)

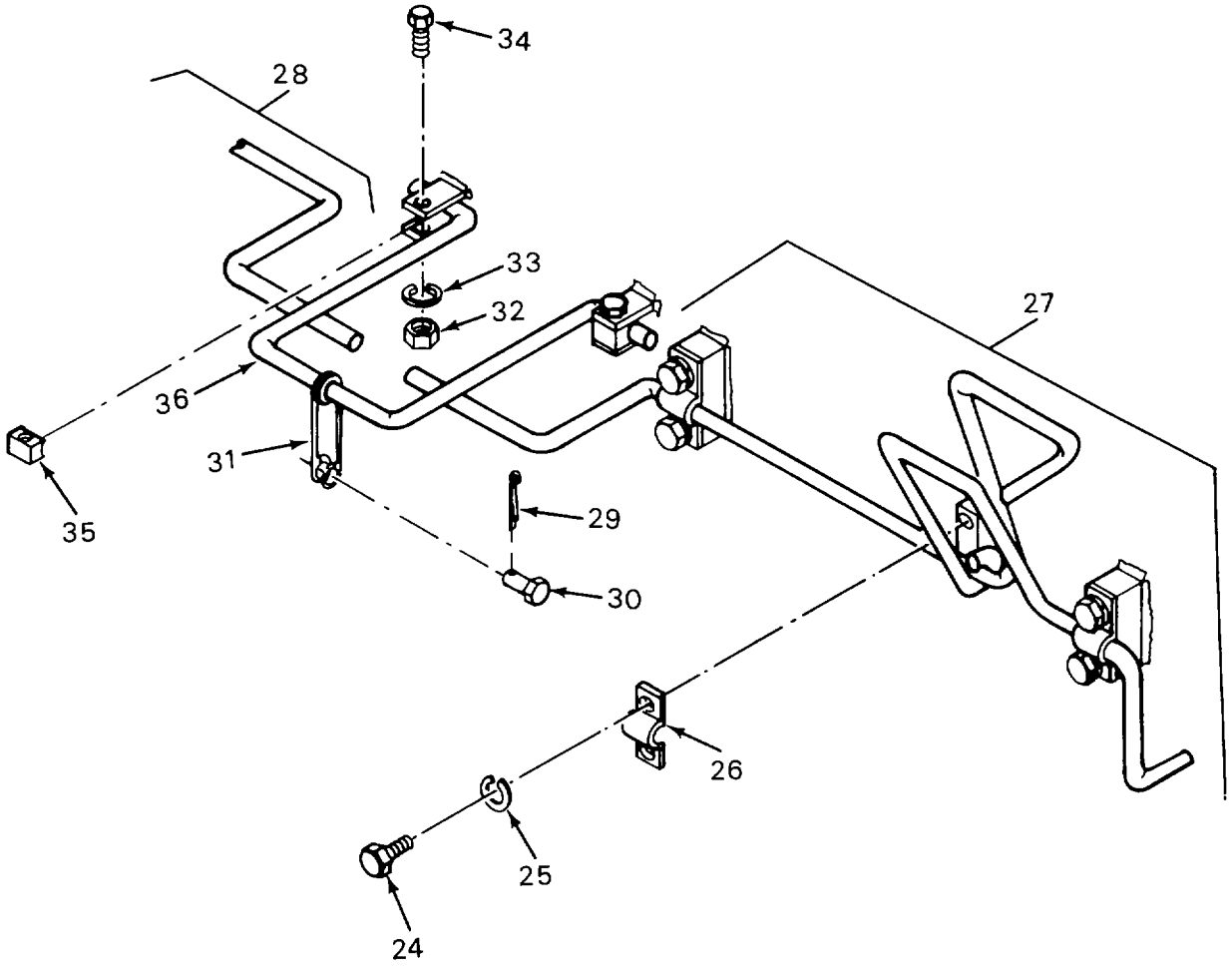

9. Remove two nuts (32), lockwashers (33), bolts (34), and retainers (35) and remove lockpin lifting bar (36).

4-12. HANDRAIL, UPRIGHT, CUTTER LEVEL, AND STEP

CLEANING, INSPECTION, AND REPAIR

WARNING

• Drycleaning solvent P-D-680 is toxic and flammable. Wear protective goggles and gloves and use only in a well-ventilated area. Avoid contact with skin, eyes, and clothes and don't breathe vapors. Do not use near open flame or excessive heat. The flash point is 100-138°F (38-59°C). If you become dizzy, get fresh air and medical aid immediately. If contact with eyes is made, wash your eyes and get medical aid immediately.

• Compressed air used for cleaning purposes will not exceed 30 psi (207 kPa). Do not direct compressed air against skin. Use goggles or full face shield.

10. Clean parts with drycleaning solvent and dry with compressed air.

11. Inspect parts for cracks, breaks, and damage.

12. Repair damaged parts by straightening or welding. Grind welds smooth. Paint repaired areas.

ASSEMBLY AND INSTALLATION

NOTE

Nuts are secured after cutter lever installation by flattening bolt heads.

13. Place lockpin lifting bar (36) in position and install two retainers (35), bolts (34), lockwashers (33), and nuts (32).

14. Position clevis (31) on coupler lifter and install pin (30) and cotter pin (29).

15. Position left cutter lever assembly (28) and right cutter lever assembly (27) on locomotive and install 6 clamps blocks (26), 12 lockwashers (25), and bolts (24).

16. Position handrail (23) on locomotive and install two bolts (22), lockwashers (21), and nuts (20).

17. Install nine lockwashers (19) and bolts (18).

4-12. HANDRAIL, UPRIGHT, CUTTER LEVEL, AND STEP (cont)

ASSEMBLY AND INSTALLATION (cont)

18. Install two lockwashers (17) and bolts (16).
19. Position handrail (15) on locomotive and install two bolts (14), lockwashers (13), nuts (12), nine lockwashers (11), and bolts (10).
20. If removed, place 6 angle brackets (9) in position and install 12 bolts (8), lockwashers (7), and nuts (6).
21. Position step (5) on locomotive and install 12 retainers (4), bolts (3), lockwashers (2), and nuts (1).

4-13. SEAT CUSHION

This task covers:

a. Removal **b. Disassembly** **c. Cleaning**
d. Inspection **e. Repair** **f. Assembly** **g. Installation**

INITIAL SETUP

Tools

Tool kit SC4940-97-CL-E16
Torch outfit 3433-00-026-4718
Welding machine 3432-00-893-3743

Materials/Parts

Detergent (Item 3 , Appendix E)
Drycleaning Solvent (Item 23, Appendix E)

REMOVAL AND DISASSEMBLY

1. Pull seat lock (1) and lift seat assembly (2) from seat mounting bracket (3).
2. Remove two bolts (4) and lockwashers (5) and slide seat mounting bracket (3) from seat track assembly (6).
3. If necessary, use a cutting torch and cut welds on seat track assembly (6). Remove seat track assembly.
4. Remove four screws (7) and remove seat (8) from seat base (9).
5. Remove pin (10) from seat height adjusting tube (11) and remove seat height adjusting tube from seat mounting bracket (3).

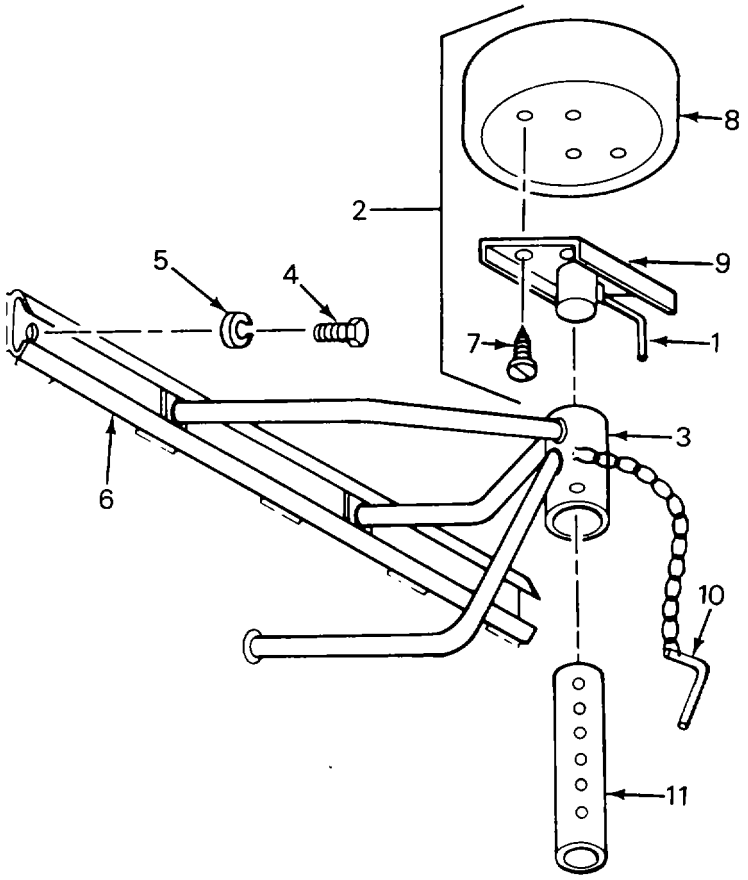

CLEANING, INSPECTION, AND REPAIR

WARNING

• Drycleaning solvent P-D-680 is toxic and flammable. Wear protective goggles and gloves and use only in a well-ventilated area. Avoid contact with skin, eyes, and clothes and don't breathe vapors. Do not use near open flame or excessive heat. The flash point is 100-138°F (38-59°C). If you become dizzy, get fresh air and medical aid immediately. If contact with eyes is made, wash your eyes and get medical aid immediately.

• Compressed air used for cleaning purposes will not exceed 30 psi (207 kPa). Do not direct compressed air against skin. Use goggles or full face shield.

6. Clean metal parts with drycleaning solvent and dry with compressed air.

7. Clean seat cover with detergent and water.

8. Inspect metal parts for cracks, breaks, and damage. Inspect seat mounting bracket (3), seat track assembly (6), and seat base (9) for wear.

9. Inspect the seat cover for rips, tears, and wear.

10. Repair as required.

ASSEMBLY AND INSTALLATION

11. Install seat height adjustment tube (11) in seat mounting bracket (3). Install pin (10) in seat height adjustment tube.

12. Position seat base (9) on bottom of seat (8) and install four screws (7).

13. Position seat track assembly (6) on cab wall and install two lockwashers (5) and bolts (4). Weld seat track to wall; then remove rear bolt and lockwasher.

14. Slide seat mounting bracket (3) into groove in seat track assembly (6) and install lockwasher (5) and bolt (4) in hole in seat track assembly.

15. Pull out on seat lock (1) and install seat assembly (2).

4-14. ARMREST

This task covers:

a. Removal **b. Cleaning** **c. Inspection**
d. Repair **e. Installation**

INITIAL SETUP

Tools	Materials/Parts
Tool kit SC4940-97-CL-E16	Detergent (Item 3, Appendix E)
Drycleaning solvent (Item 23, Appendix E)	

REMOVAL

1. Remove six screws (1) and armrest (2).
2. Remove six screws (3) and flat washers (4). Remove two hinges (5) from cab wall (6).

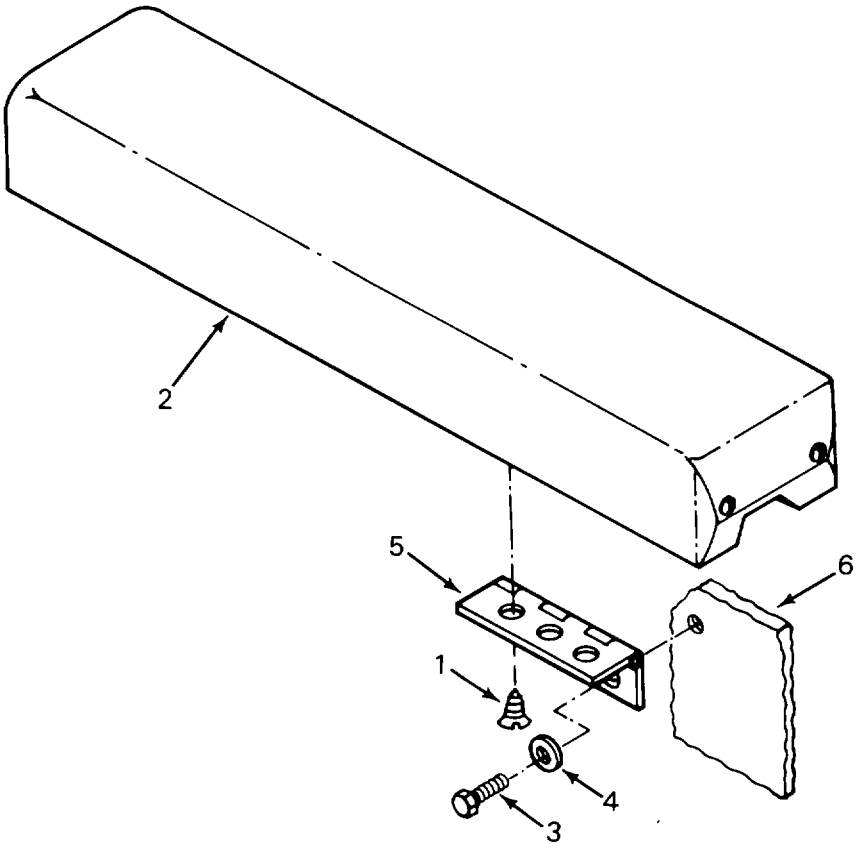

CLEANING, INSPECTION, AND REPAIR

WARNING

· Drycleaning solvent P-D-680 is toxic and flammable. Wear protective goggles and gloves and use only in a well-ventilated area. Avoid contact with skin, eyes, and clothes and don't breathe vapors. Do not use near open flame or excessive heat. The flash point is 100-138°F (38-59°C). If you become dizzy, get fresh air and medical aid immediately. If contact with eyes is made, wash your eyes and get medical aid immediately.

· Compressed air used for cleaning purposes will not exceed 30 psi (207 kPa). Do not direct compressed air against skin. Use goggles or full face shield.

3. Clean metal parts with drycleaning solvent and dry with compressed air.
4. Clean armrest cover with detergent and water.
5. Inspect metal parts for cracks, breaks, and damage.
6. Inspect armrest cover for rips, tears, and wear.
7. Repair as required.

INSTALLATION

8. Position two hinges (5) on cab wall (6) and install six flat washers (4) and screws (3).
9. Position armrest (2) on hinges (5) and install six screws (1).

4-15. WINDSHIELD WIPER MOTOR, BLADE, AND ARM

This task covers:

a. Removal **b. Disassembly** **c. Cleaning**
d. Inspection **e. Repair** **f. Assembly** **g. Installation**

INITIAL SETUP

Tools	Materials/Parts
Tool kit SC4940-97-CL-E16	Lubricating oil (Item 14, Appendix E) Technical petrolatum (Item 19, Appendix E)

NOTE

Both windshield wiper motors are removed and installed the same way.

REMOVAL

1. Close cutout cock on floor inside electrical equipment cabinet. Loosen setscrew (1) and remove wiper arm (2). Remove cotter pin (3), pin (4), and wiper blade (5).

2. Disconnect air line fitting (6) from cutoff valve (7).

3. Remove two nuts (8), lockwashers (9), capscrews (10), and two wooden spacers (11) (on door-mounted windshield wiper motor only) and remove wiper motor assembly (12).

4. Remove cutoff valve (7) with tube extension.

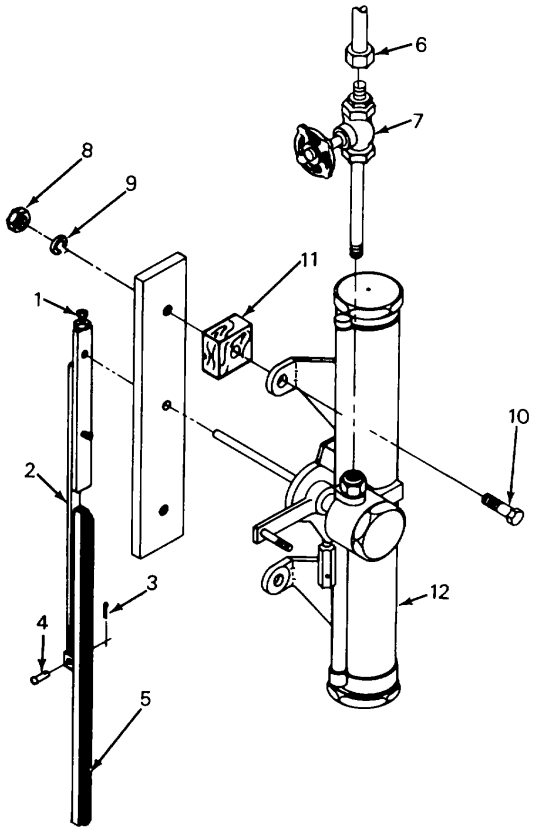

4-15. WINDSHIELD WIPER MOTOR, BLADE, AND ARM (cont)

DISASSEMBLY

5. Remove reverser ball housing (13).

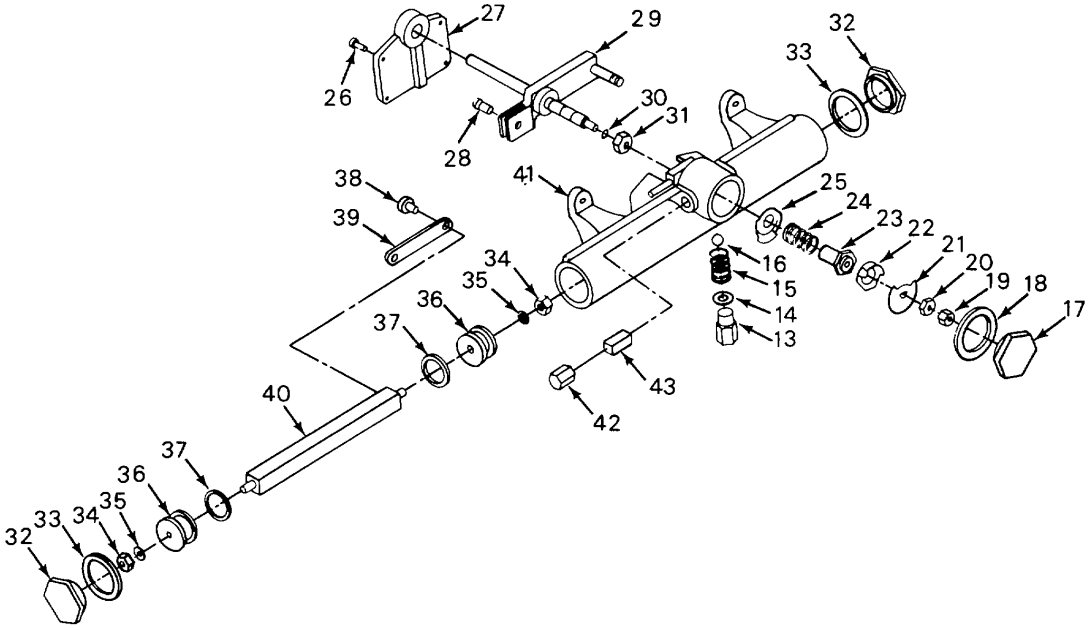

6. Remove gasket (14), reverser ball spring (15), and reverser ball (16).
7. Remove air chamber cap assembly (17) and gasket (18).
8. Remove timer locknut (19) and timer nut (20).
9. Remove timer (21), timer reverser (22), sleeve bearing (23), valve spring (24), and timer valve (25).
10. Remove four screws (26) and back bearing plate (27).
11. Remove screw (28), transmission (29), rubber seal (30), and sleeve bearing nut (31).
12. Remove two endcaps (32) and gaskets (33).
13. Remove two nuts (34) and lockwashers (35).
14. Remove two O-ring retainers (36) and O-rings (37). Remove machine screw (38) and connecting link (39).
15. Remove connecting rod (40) from cylinder (41).
16. Remove exhaust nut (42) and felt muffler (43).

4-15. WINDSHIELD WIPER MOTOR, BLADE, AND ARM (cont)

CLEANING, INSPECTION, AND REPAIR

WARNING

· Drycleaning solvent P-D-680 is toxic and flammable. Wear protective goggles and gloves and use only in a well-ventilated area. Avoid contact with skin, eyes, and clothes and don't breathe vapors. Do not use near open flame or excessive heat. The flash point is 100-138°F (38-59°C). If you become dizzy while using cleaning solvent, get fresh air and medical aid immediately. If contact with eyes is made, wash your eyes and get medical aid immediately.

· Compressed air used for cleaning purposes will not exceed 30 psi (207 kPa). Do not direct compressed air against skin. Use goggles or full face shield.

17. Clean metal parts with drycleaning solvent and dry with compressed air.

18. Clean felt muffler (43) in drycleaning solvent and dry thoroughly.

19. Inspect parts for wear, damage, and serviceability.

20. Repair consists of replacement of defective parts.

ASSEMBLY

21. Use petrolatum and lubricate air chamber.

22. Use lubricating oil and lubricate cylinder (41).

23. Use petrolatum and lubricate two O-rings (37) and O-ring retainers (36). Install retainers and O-rings on connecting rod (40). Secure with two lockwashers (35) and nuts (34). Position connecting link (39) on connecting rod and install machine screw (38).

24. Install connecting rod (40), with attached parts, in cylinder (41). Install two gaskets (33) and endcaps (32).

25. Install rubber seal (30), transmission (29), and sleeve bearing nut (31) in cylinder (41). Secure with screw (28).

26. Install back bearing plate (27) and secure with four screws (26).

27. Install timer valve (25), valve spring (24), sleeve bearing (23), timer reverser (22), timer (21), and timer nut (20). Do not tighten timer nut.

4-15. WINDSHIELD WIPER MOTOR, BLADE, AND ARM (cont)

ASSEMBLY (cont)

28. Install reverser ball (16), reverser ball spring (15), gasket (14), and reverser ball housing (13).

29. Loosen sleeve bearing nut (31) and adjust sleeve bearing (23) up or down in the valve chamber so that the point of timer reverser (22) is riding on greatest diameter of reverser ball (16). Tighten sleeve bearing nut and timer nut (20). Recheck adjustment.

30. Install timer locknut (19), gasket (18), and air chamber cap assembly (17).

31. Lubricate felt muffler (43) with lubricating oil. Install felt muffler and exhaust nut (42).

INSTALLATION

32. Install cutoff valve (7) with tube extension and position wiper motor assembly (12) and install two wooden spacers (11) (door-mounted windshield wiper motor only), two capscrews (10), lockwashers (9), and nuts (8).

33. Connect air line fitting (6) to cutoff valve (7). Close cutoff valve.

34. Install wiper blade (5) and install pin (4) and cotter pin (3). Install wiper arm (2) and tighten setscrew (1).

35. Open cutout cock inside high-voltage cabinet. Open cutoff valve (7) and check windshield wiper motor for proper operation.

4-16. WINDOW GLASS AND SASH

This task covers:

a. Removal **b. Cleaning** **c. Inspection**
d. Repair **e. Installation**

INITIAL SETUP

Tools	Materials/Parts
Tool kit No. SC4940-97-CL-E16	Drycleaning solvent (Item 23, Appendix E)

REMOVAL

Fixed Windows

1. Remove weatherstrip filler (1).
2. Remove weatherstrip (2) with glass (3). Remove glass from weatherstrip. Sliding Windows
3. Remove 11 screws (4) and upper track (5).
4. Unlatch lock (6) and lift sashes (7) and (8) from lower track (9).
5. Remove two weatherstrip fillers (10) and remove two weatherstrips (11) with glass from sashes (7) and (8). Remove two glasses (12).

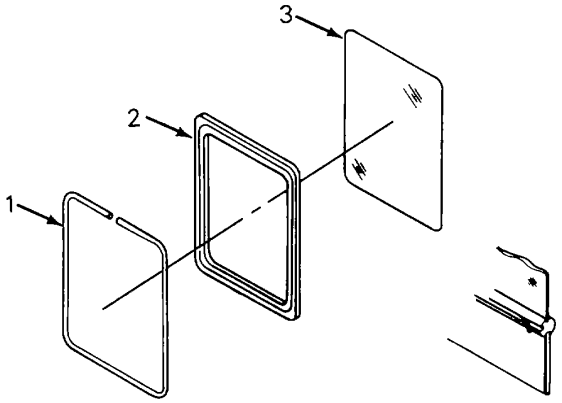

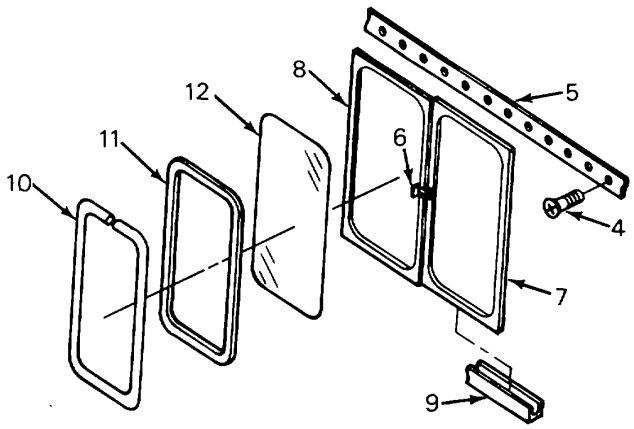

4-16. WINDOW GLASS AND SASH (cont)

REMOVAL (cont)

Front Window

6. Remove windshield wiper (para 4-15)

7. Remove 10 screws (13) and rain shield (14).

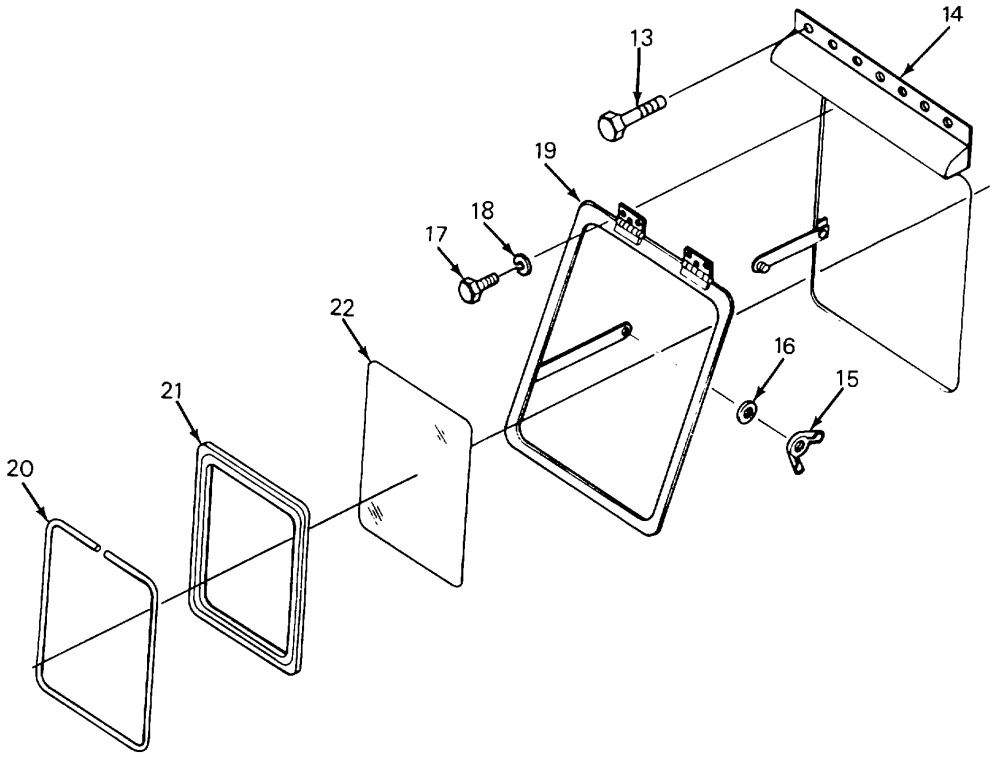

8. Remove two wingnuts (15) and flat washers (16).

9. Remove six screws (17) and lockwashers (18) and remove window frame (19).

10. Remove weatherstrip filler (20) and remove weatherstrip (21) with glass (22) from window frame (19). Remove glass from weatherstrip.

4-16. WINDOW GLASS AND SASH

CLEANING, INSPECTION, AND REPAIR

WARNING

· Drycleaning solvent P-D-680 is toxic and flammable. Wear protective goggles and gloves and use only in a well-ventilated area. Avoid contact with skin, eyes, and clothes and don't breathe vapors. Do not use near open flame or excessive heat. The flash point is 100-138°F (38-59°C). If you become dizzy, get fresh air and medical aid immediately. If contact with eyes is made, wash your eyes and get medical aid immediately.

· Compressed air used for cleaning purposes will not exceed 30 psi (207 kPa). Do not direct compressed air against skin. Use goggles or full face shield.

11. Clean metal parts with drycleaning solvent and dry with compressed air.

12. Inspect weatherstrip for cracks, breaks, and damage.

13. Inspect glass for chips and cracks.

14. Inspect frames and sashes for cracks, breaks, and deformation.

15. Repair consists of replacement of damaged parts.

INSTALLATION

Front Window

16. Position glass (22) in weatherstrip (21) and install weatherstrip with glass in window frame (19). Install weatherstrip filler (20).

17. Position window frame (19) and install six lockwashers (18) and screws (17).

18. Install two flat washers (16) and wingnuts (15).

19. Position rain shield (14) and install 10 screws (13).

20. Install windshield wiper (para 4-15).

INSTALLATION (cont)

Sliding Windows

21. Place two glasses (12) in two weatherstrips (11). Place weatherstrips with glasses in sashes (8) and (7).
22. Place sashes (8) and (7) in lower track (9).
23. Place upper track (5) in position and install 11 screws (4). Latch lock (6).

Fixed Windows

24. Place glass (3) in weatherstrip (2). Place weatherstrip with glass in sash.
25. Install weatherstrip filler (1) in weatherstrip (2).

4-17. CAB DOOR AND LOCK

This task covers:

a.	Removal	c.	Cleaning	e.	Repair	g.	Installation
b.	Disassembly	d.	Inspection	f.	Assembly		

INITIAL SETUP

Tools
Tool kit SC4940-97-CL-E16
Torch outfit 3433-00-026-4718
Welding machine 3432-00-893-3743

Materials/Parts
Drycleaning solvent (Item 23, Appendix E)

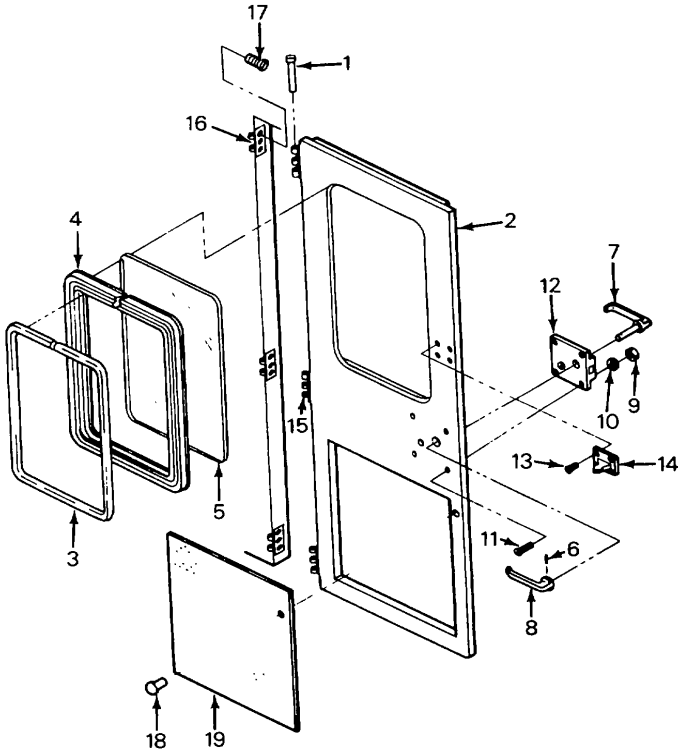

REMOVAL

1. Remove windshield wiper (para 4-15) from engineers door if required.
2. Remove three pins (1) and door (2).

DISASSEMBLY

3. Remove weatherstrip filler (3). Remove weatherstrip (4) and glass (5). Remove glass from weatherstrip.
4. Remove pin (6), inside handle (7), and outside handle (8).
5. Remove four nuts (9), lockwashers (10), screws (11), and door lock assembly (12).
6. Remove four machine screws (13) and door catch (14).
7. If necessary, use a cutting torch and remove three hinge halves (15) from door (2).

4-17. CAB DOOR AND LOCK (cont)

DISASSEMBLY (cont)

8. If necessary, use a cutting torch and cut the welds on hinge halves (16) on door frame of cab. Remove nine countersunk screws (17) and remove hinge halves.

9. If necessary cut rivets (18) on bottom half of door and remove perforated panel (19).

CLEANING, INSPECTION, AND REPAIR

WARNING

- **Drycleaning solvent P-D-680 is toxic and flammable. Wear protective goggles and gloves and use only in a well-ventilated area. Avoid contact with skin, eyes, and clothes and don't breathe vapors. Do not use near open flame or excessive heat. The flash point is 100 - 138°F (38 - 59°C). If you become dizzy, get fresh air and medical aid immediately. If contact with eyes is made, wash your eyes and get medical aid immediately.**

- **Compressed air used for cleaning purposes will not exceed 30 psi (207 kPa). Do not direct compressed air against skin. Use goggles or full face shield.**

10. Clean metal parts with drycleaning solvent and dry with compressed air.

11. Inspect parts for cracks, breaks, and damage.

12. Inspect handle and lock for condition and serviceability.

13. Repair metal defects by patching, welding, and grinding smooth. Paint repaired parts.

14. Repair of other damaged parts consists of replacement.

ASSEMBLY

15. If removed, position perforated panel (19) on door (2) and install rivets (18).

16. If removed, position three hinge halves (16) on door frame of cab, install nine countersunk screws (17), and weld hinge halves to door frame.

17. If removed, position three hinge halves (15) on door (2) and weld hinge halves to door.

18. Install door catch (14) and four machine screws (13).

4-17. CAB DOOR AND LOCK (cont)

ASSEMBLY (cont)

19. Position door lock assembly (12) on inside of door (2) and install four screws (11), lockwashers (10), and nuts (9).

20. Position outside handle (8) through door (2).

21. Install inside handle (7) on shaft of outside handle (8) and install pin (6).

22. Install glass (5) in weatherstrip (4) and position in window sash in door (2).Install weatherstrip filler (3).

INSTALLATION

23. Position door (2) on cab body and install three pins (1).

24 .If removed, install windshield wiper (para 4-15) on engineer door.

4-18. SIDE COMPARTMENT DOOR

This task covers:

a.	Removal	c.	Cleaning	e.	Repair	g.	Installation
b.	Disassembly	d.	Inspection	f.	Assembly		

INITIAL SETUP

Tools
Tool kit SC4940-97-CL-E16
Torch outfit 3433-00-026-4718
Welding machine 3432-00-893-3743

Material/Parts
Drycleaning solvent (Item 23, Appendix E)
Lubricating oil (Item 14, Appendix E)

REMOVAL

NOTE

All side compartment doors, handles, and locks are removed in a similar manner.

1. Remove two pins (1) and door (2).

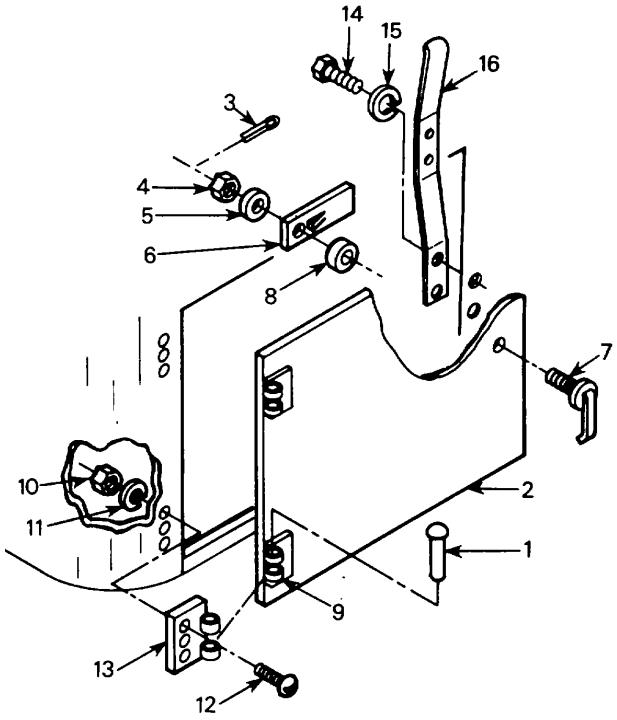

DISASSEMBLY

NOTE

Disassemble door handle and latch assembly only if required.

2. Remove cotter pin (3), castle nut (4), flat washer (5), and latch (6) and remove handle (7).If necessary, use cutting torch and remove spacer (8).

3. If necessary, drill out spot welds and remove two door hinge halves (9) from door (2). Remove six nuts (10), lockwashers (11), and screws (12) and remove two hinge halves (13) from cab.
4. Remove two capscrews (14), lockwashers (15), and spring (16) from inside of door frame.

4-18. SIDE COMPARTMENT DOOR (cont)

CLEANING, INSPECTION, AND REPAIR

5. Use a stiff brush and remove dirt and sludge deposits.

WARNING

- **Drycleaning solvent P-D-680 is toxic and flammable. Wear protective goggles and gloves and use only in a well-ventilated area. Avoid contact with skin, eyes, and clothes and don't breathe vapors. Do not use near open flame or excessive heat. The flash point is 100 - 138°F (38 - 59°C).If you become dizzy while using cleaning solvent, get fresh air and medical aid immediately. If contact with eyes is made, wash your eyes and get medical aid immediately.**
- **Compressed air used for cleaning purposes will not exceed 30 psi (207 kPa).Do not direct compressed air against skin. Use goggles or full face shield.**

6. Use drycleaning solvent and remove grease and oil and dry with compressed air.
7. Inspect doors and door latches for proper working condition.
8. Inspect pins (1) and hinge halves (9) and (13) for serviceability.
9. Inspect sheet metal for dents, cracks, and corrosion.
10. Replace missing or damaged parts.
11. Repair metal defects by patching, welding, and grinding smooth. Paint repaired parts.
12. Lubricate latches and hinges with lubricating oil in accordance with LO 55-2210-224-12.

ASSEMBLY

13. Position spring (16) on door frame and install two lockwashers (15) and capscrews (14).
14. Position two hinge halves (13) on cab and install six screws (12), lockwashers (11), and nuts (10).
15. If removed, position and spot weld two hinge halves (9) on door (2).

4-18. SIDE COMPARTMENT DOOR (cont)

ASSEMBLY (cont)

16. If removed, weld spacer (8) on door (2).
17. Position handle (7) through hole in door (2) and install latch (6) on handle.
18. Install flat washer (5), castle nut (4), and cotter pin (3).

INSTALLATION

19. Position door (2) on cab frame and insert two pins (1).

4-19. ELECTRICAL EQUIPMENT CABINET DOOR

This task covers:

a. Removal
b. Disassembly
c. Cleaning
d. Inspection
e. Repair
f. Assembly
g. Installation

INITIAL SETUP

Tools

Tool kit SC4940-97-CL-E16
Welding machine 3432-00-893-3743

Material/Parts

Drycleaning solvent (Item 23, Appendix E)

REMOVAL

WARNING

- **Remove rings, bracelets, wristwatches, and neck chains before working around the locomotive. Jewelry can catch on equipment and cause injury, or may short across an electrical circuit and cause severe burns or electrical shock.**
- **High voltage is used in the operation of equipment. Do not be misled by the term LOW VOLTAGE. Potentials as low as 50 volts may cause death.**

NOTE

Maintenance procedures are the same for both doors. There is no latch assembly on adjoining door.

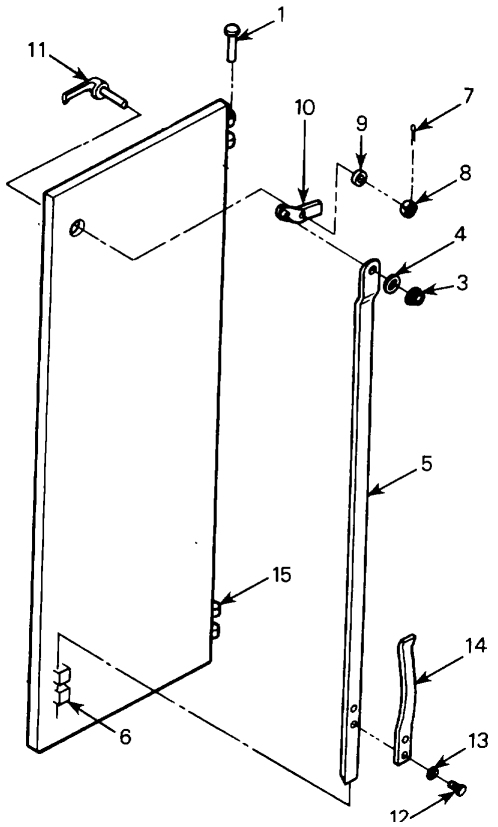

1. Remove two pins (1) and remove door (2).

DISASSEMBLY

2. Remove spring (3) and flat washer (4) and remove latch bar (5) from guide loops (6).
3. Remove cotter pin (7), nut (8), flat washer (9), and latch lever (10).
4. Remove door handle (11).

4-19. ELECTRICAL EQUIPMENT CABINET DOOR (cont)

DISASSEMBLY (cont)

5. Remove two screws (12), lockwashers (13), and spring (14) from latch lever (10).
6. If necessary, drill out spot welds and remove two hinge halves (15).

CLEANING, INSPECTION, AND REPAIR

WARNING

- **Drycleaning solvent P-D-680 is toxic and flammable. Wear protective goggles and gloves and use only in a well-ventilated area. Avoid contact with skin, eyes, and clothes and don't breathe vapors. Do not use near open flame or excessive heat. The flash point is 100 - 138°F (38 - 59°C). If you become dizzy, get fresh air and medical aid immediately. If contact with eyes is made, wash your eyes and get medical aid immediately.**
- **Compressed air used for cleaning purposes will not exceed 30 psi (207 kPa). Do not direct compressed air against skin. Use goggles or full face shield.**

7. Clean parts with drycleaning solvent and dry with compressed air.
8. Inspect parts for cracks, breaks, and damage.
9. Inspect lock and handle for serviceability.
10. Repair damaged parts by straightening or welding. Grind welds smooth. Paint repaired areas.

ASSEMBLY

11. If removed, weld two hinges halves (15) on door (2).
12. Position spring (14) on latch bar (5) and install two lockwashers (13) and screws (12).
13. Install handle (11) in door (2) and position latch lever (10) on handle shaft.
14. Install flat washer (9), nut (8), and cotter pin (7).
15. Position latch bar (5) in guide loops (6) and on latch lever (10) and install flat washer (4) and spring (3).

INSTALLATION

16. Position door (2) on electrical equipment cabinet and install two pins (1).

4-20. SAFETY WARNING BELL ASSEMBLY

This task covers:

a. Removal
b. Disassembly
c. Cleaning
d. Inspection
e. Repair
f. Assembly
g. Installation

INITIAL SETUP

Tools

Tool kit SC4940-97-CL-E16
Drycleaning solvent (Item 23, Appendix E)

Material/Parts

Antiseize tape (Item 25, Appendix E)

REMOVAL

NOTE

Make sure bell switch is in OFF position.

1. Disconnect air line fitting (1) and remove male half union (2).

2. Remove nut (3), flat washer (4), and bell assembly (5) from brack

DISASSEMBLY

3. Remove bell (7). Remove cotter pin (8) and pin (9). Remove cla

4. Loosen jamnut (11) and setscrew (12).
   Remove clevis (13) and separate motor (14) and motor housing (

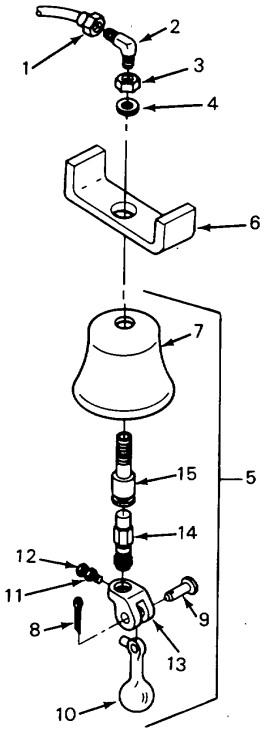

4-20. SAFETY WARNING BELL ASSEMBLY (cont)

CLEANING, INSPECTION, AND REPAIR

WARNING

- **Drycleaning solvent P-D-680 is toxic and flammable. Wear protective goggles and gloves and use only in a well-ventilated area. Avoid contact with skin, eyes, and clothes and don't breathe vapors. Do not use near open flame or excessive heat. The flash point is 100 - 138°F (38 - 59°C). If you become dizzy, get fresh air and medical aid immediately. If contact with eyes is made, wash your eyes and get medical aid immediately.**

- **Compressed air used for cleaning purposes will not exceed 30 psi (207 kPa). Do not direct compressed air against skin. Use goggles or full face shield.**

5. Clean parts with drycleaning solvent and dry with compressed air.

6. Inspect parts for cracks, breaks, and damage.

7. Repair consists of replacement of damaged parts. Lubricate in accordance with LO 55-2210-224-12.

ASSEMBLY

8. Place motor (14) in motor housing (15) and install on clevis (13).Tighten setscrew (12) and jamnut (11).

9. Position clapper (10) in clevis (13) and install pin (9) and cotter pin (8). Place bell (7) on motor housing (15).

INSTALLATION

10. Position bell assembly (5) in mounting bracket (6) and install flat washer (4) and nut (3).

11. Apply antiseize tape to threads on male half union (2).Connect male half union to motor housing (15) and connect air line fitting (1) to male half union.

12. Start locomotive (para 2-10 and 2-11).After air pressure buildup, check safety warning bell assembly for proper operation.

4-21. MULTIPLE-UNIT ENGINE SYSTEM WARNING BELL

This task covers:

a. Test b. Removal c. Installation

INITIAL SETUP

Tools
Tool kit SC4940-97-CL-E16

TEST

WARNING

- **Remove rings, bracelets, wristwatches, and neck chains before working around the locomotive. Jewelry can catch on equipment and cause injury, or may short across an electrical circuit and cause severe burns or electrical shock.**
- **High voltage is used in the operation of equipment. Do not be misled by the term LOW VOLTAGE. Potentials as low as 50 volts may cause death.**

1. Remove five screws (1), panel (2), and gasket (3).

2. Open electrical equipment cabinet door and set battery switch to CLOSE.

3. Use multimeter and test bell for 32 volts line voltage before removal. Set battery switch to OPEN.

REMOVAL

4. Remove nut (4). Tag and disconnect electrical leads (5) and remove bell assembly (6).

5. Remove four screws (7) and backing plate (8).

4-21. MULTIPLE-UNIT ENGINE SYSTEM WARNING BELL (cont)

REMOVAL (cont)

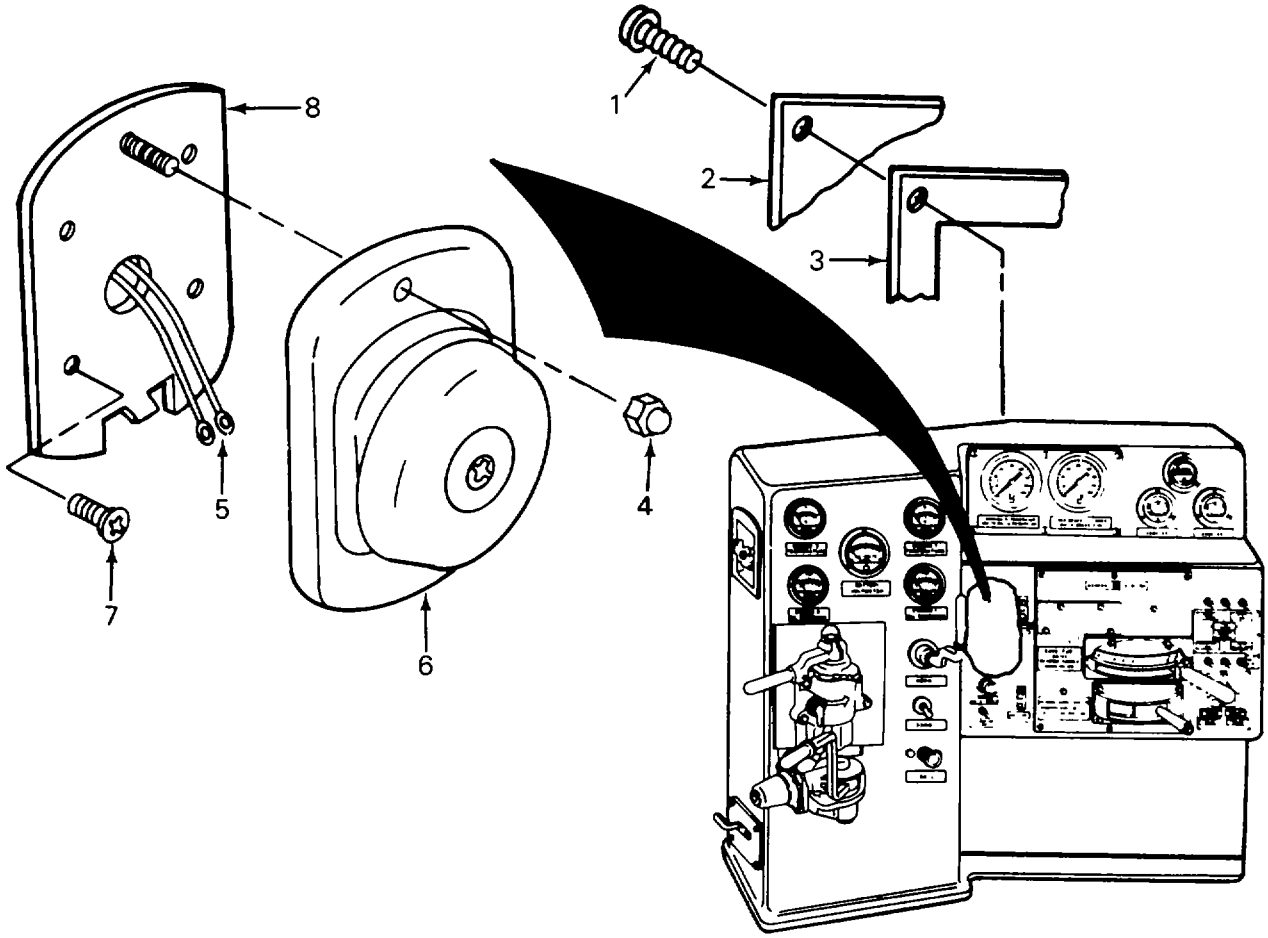

INSTALLATION

6. Position backing plate (8) on inside of control stand wall and install four screws (7).
7. Connect electrical leads (5) and remove tags.
8. Position bell assembly (6) on backing plate (8) and install nut (4).
9. Position gasket (3) and panel (2) on back of control panel and install five screws (1).
10. Close electrical equipment cabinet door.

4-22. ENGINE SYSTEM WARNING BUZZER

This task covers:

a. Test b. Removal c. Installation

INITIAL SETUP

Tools

Tool kit SC4940-97-CL-E16

TEST

WARNING

- **Remove rings, bracelets, wristwatches, and neck chains before working around the locomotive. Jewelry can catch on equipment and cause injury, or may short across an electrical circuit and cause severe burns or electrical shock.**
- **High voltage is used in the operation of equipment. Do not be misled by the term LOW VOLTAGE. Potentials as low as 50 volts may cause death.**

1. Remove thirteen screws (1), two panels (2), and gaskets (3).

2. Open electrical equipment cabinet door and set battery switch to CLOSE.

3. Use multimeter and test buzzer for 32 volts line voltage before removal. Set battery switch to OPEN.

REMOVAL

4. Remove screw (4) and remove cover (5) and gasket (6).

5. Tag and disconnect electrical leads (7). Remove two nuts (8), lockwashers (9), screws (10), and buzzer assembly (11).

4-22. ENGINE SYSTEM WARNING BUZZER (cont)

REMOVAL (cont)

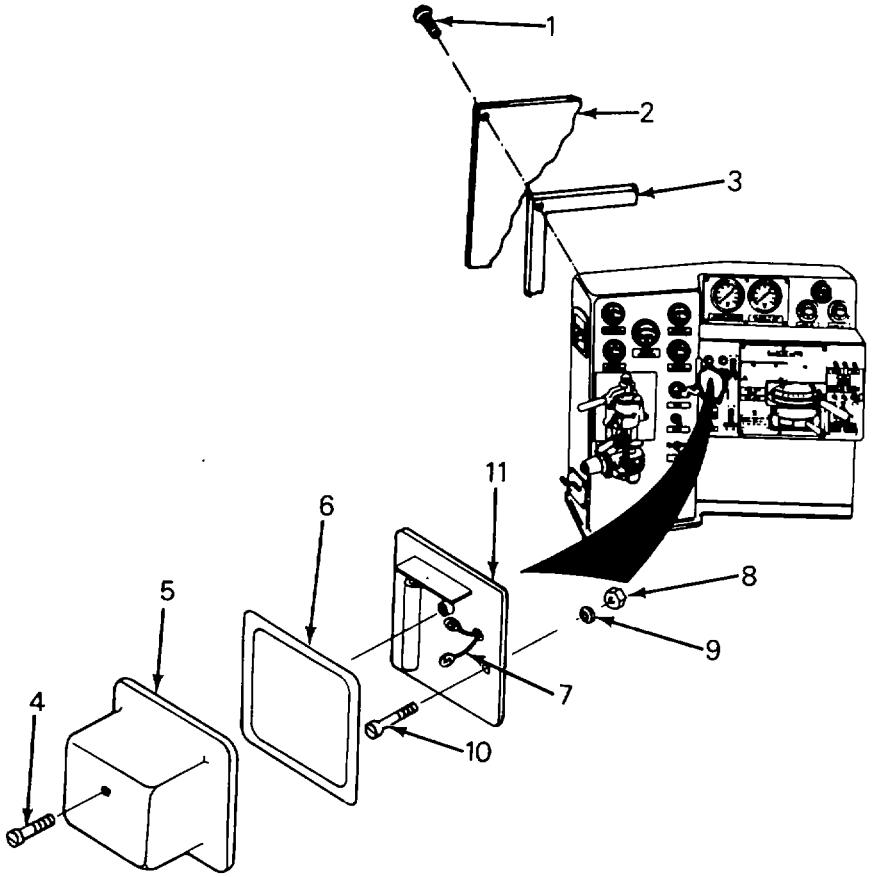

INSTALLATION

6. Position buzzer assembly (11) on control cabinet and install two screws (10), lockwashers (9), and nuts (8).

7. Connect electrical leads (7) and remove tags.

8. Install gasket (6) and cover (5) and tighten screw (4).

9. Install gasket (3), panel (2), and five screws (1).

10. Close electrical equipment cabinet door.

4-23. HORN ASSEMBLY

This task covers:

a. Removal
b. Disassembly
c. Cleaning
d. Inspection
e. Repair
f. Assembly
g. Installation

INITIAL SETUP

Tools

Tool kit SC4940-97-CL-E16

Material/Parts

Drycleaning solvent (Item 23, Appendix E)

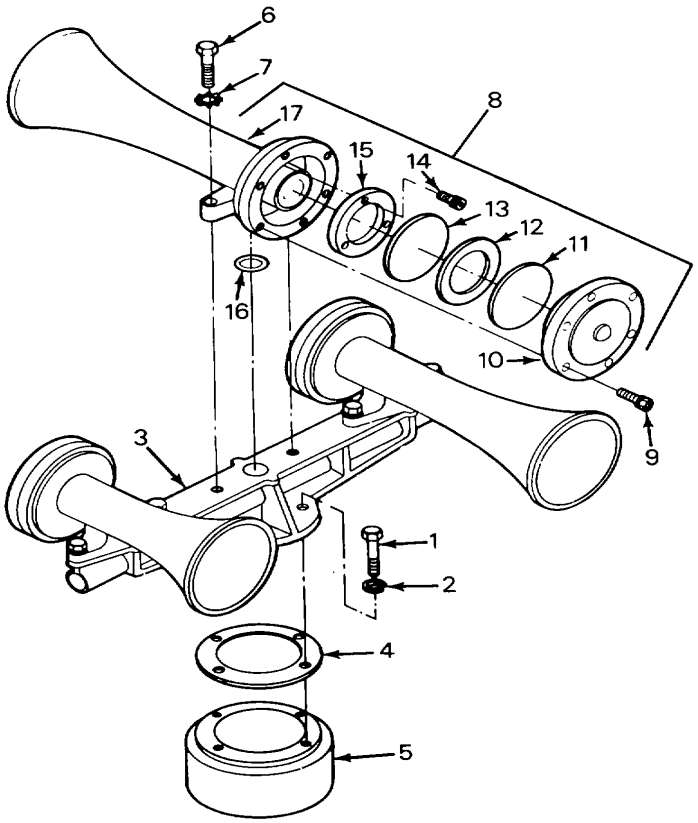

NOTE

The different size horns are removed, disassembled, repaired, assembled, and installed the same.

REMOVAL

1. Remove four screws (1) and lockwashers (2). Remove base (3), with horns. Remove gasket (4) from mount (5).

2. Remove two screws (6) and lockwashers (7). Remove horn assembly (8).

DISASSEMBLY

3. Remove six screws (9) and cap (10) with diaphragm disc (11), cushion ring (12), and diaphragm disc (13).

4. Remove three screws (14) and diffuser (15). Remove seal (16) from horn body (17).

4-23. HORN ASSEMBLY (cont)

CLEANING, INSPECTION, AND REPAIR

WARNING

- **Drycleaning solvent P-D-680 is toxic and flammable. Wear protective goggles and gloves and use only in a well-ventilated area. Avoid contact with skin, eyes, and clothes and don't breathe vapors. Do not use near open flame or excessive heat. The flash point is 100 - 138°F (38 - 59°C). If you become dizzy, get fresh air and medical aid immediately. If contact with eyes is made, wash your eyes and get medical aid immediately.**

- **Compressed air used for cleaning purposes will not exceed 30 psi (207 kPa). Do not direct compressed air against skin. Use goggles or full face shield.**

5. Clean metal parts in drycleaning solvent and dry with compressed air.

6. Clean seals with compressed air.

7. Inspect horn for cracks, breaks, and damage. Inspect seals for serviceability.

8. Repair consists of replacement of damaged parts. ASSEMBLY

CAUTION

The horn is made of aluminum. Screws (9) and (14) should always be replaced with low-torque screws.

9. Install seal (16) in horn body (17).Place diffuser (15) in body and install three screws (14).

10. Place diaphragm disc (13), cushion ring (12), and diaphragm disc (11) in cap (10).Place cap on horn body (17) and install six screws (9).

INSTALLATION

11. Position horn assembly (8) on base (3) and install two lockwashers (7) and screws (6).

12. Place gasket (4) on mount (5).Install base (3) on mount (5) and install four lockwashers (2) and screws (1).

13. Start locomotive (para 2-10 and 2-11).After air pressure buildup, check horn for proper operation.

4-24. CAB HEATER ASSEMBLY

This task covers:

a.	Test	c.	Disassembly	e.	Inspection	g.	Assembly
b.	Removal	d.	Cleaning	f.	Repair	h.	Installation

INITIAL SETUP

Tools	Material/Parts
Tool kit SC4940-97-CL-E16	Drycleaning solvent (Item 23, Appendix E)

TEST

WARNING

- **Remove rings, bracelets, wristwatches, and neck chains before working around the locomotive. Jewelry can catch on equipment and cause injury, or may short across an electrical circuit and cause severe burns or electrical shock.**
- **High voltage is used in the operation of equipment. Do not be misled by the term LOW VOLTAGE. Potentials as low as 50 volts may cause death.**

1. Open electrical equipment cabinet door and set battery switch to CLOSE. Set heater switch to ON.

2 .Remove cover and test heater fan motor, resistors, and switch for proper operation prior to disassembly.

3. Set battery switch to OPEN.

REMOVAL

NOTE

Brushes can be removed and replaced without removing or disassembling the heater. For brush replacement only, do steps 3, 4, 11, 24, and 30.

4. Remove two screws (1), lockwashers (2), and cover (3).

4-24. CAB HEATER ASSEMBLY (cont)

REMOVAL (cont)

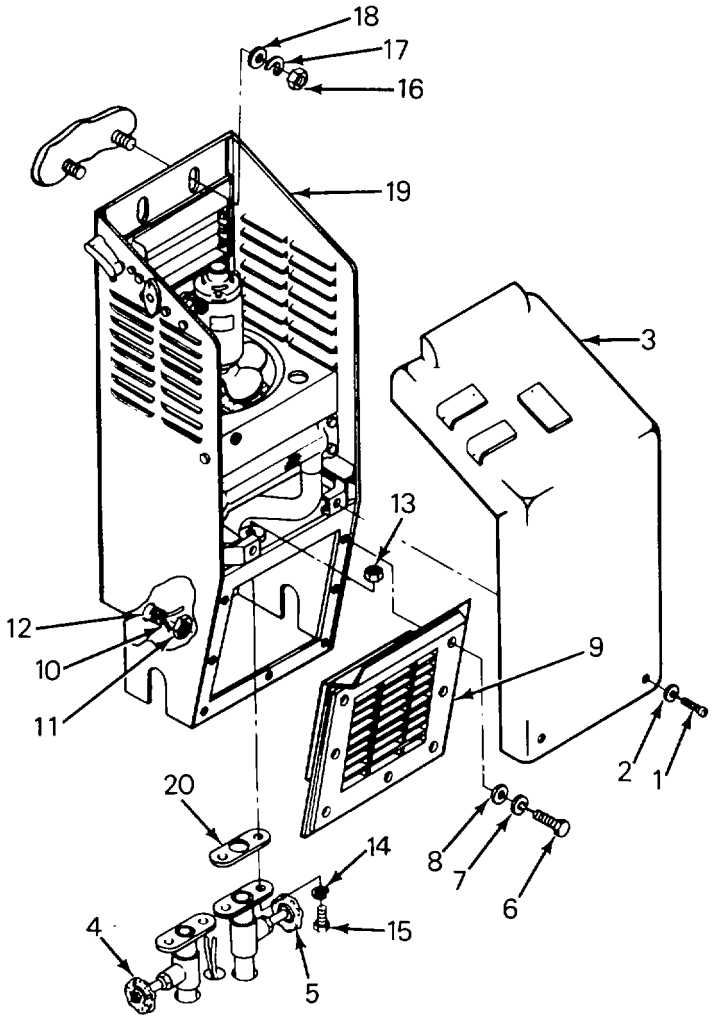

5. Close input cutoff valve (4) and output cutoff valve (5).

6. Remove seven screws (6), lockwashers (7), and flat washers (8). Remove lower grille (9).

7. Tag and disconnect input wires (10). Remove conduit nut (11) from input conduit (12).

8. Remove four nuts (13), lockwashers (14), and screws (15) from radiator core manifold. Remove two nuts (16), lockwashers (17), and flat washers (18). Remove heater (19) and two manifold gaskets (20).

4-24. CAB HEATER ASSEMBLY (cont)

DISASSEMBLY

9. Tag and disconnect motor wires (21).

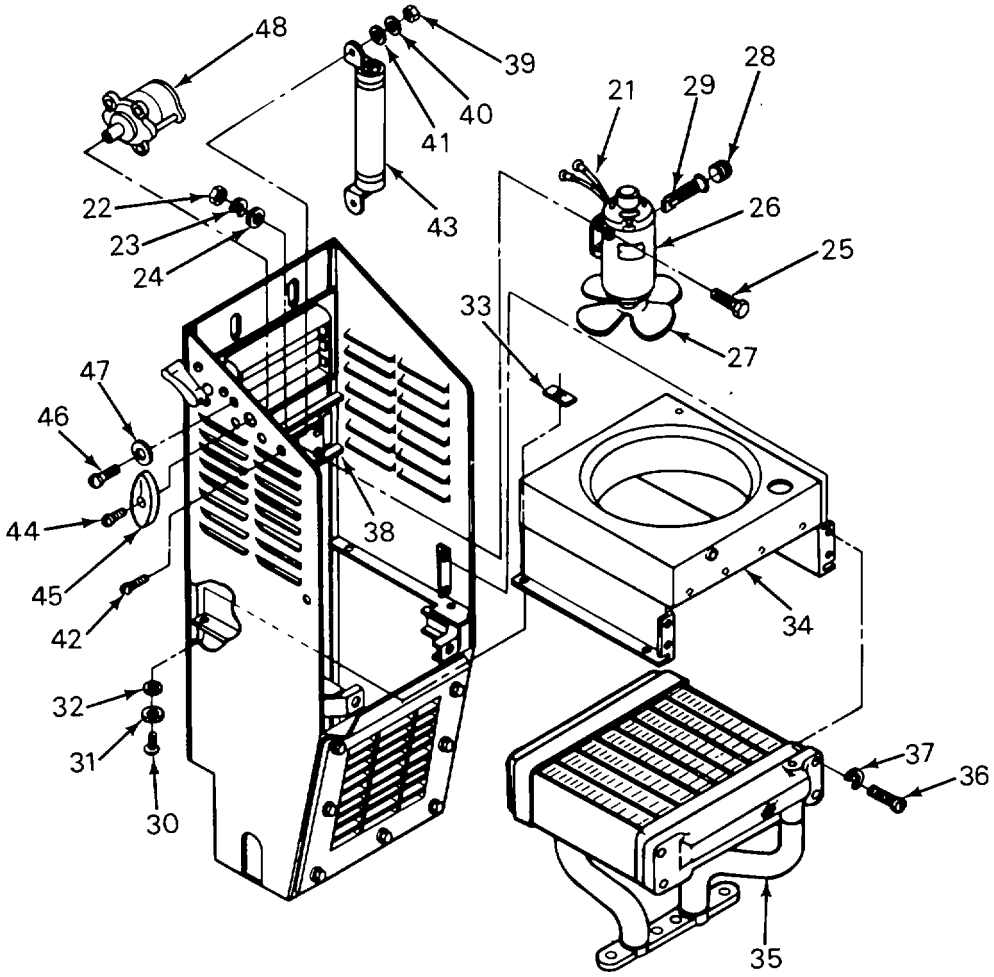

10. Remove four nuts (22), lockwashers (23), flat washers (24), and capscrews (25). Remove motor (26) and fan (27). Loosen setscrew and remove fan.

11. Remove two caps (28) and brushes (29) from motor (26).

12. Remove four screws (30), lockwashers (31), flat washers (32), and clip (33). Remove fan guard (34) and radiator core (35). Remove four screws (36) and lockwashers (37). Remove fan guard from radiator core.

13. Tag and disconnect resistor wires (38). Remove two nuts (39), lockwashers (40), flat washers (41), and screws (42). Remove resistor (43).

14. Tag and disconnect remaining wires from switch (48). Remove screw (44) and knob (45). Remove two screws (46) and lockwashers (47). Remove switch.

4-24. CAB HEATER ASSEMBLY (cont)

CLEANING, INSPECTION, AND REPAIR

WARNING

Drycleaning solvent P-D-680 is toxic and flammable. Wear protective goggles and gloves and use only in a well-ventilated area. Avoid contact with skin, eyes, and clothes and don't breathe vapors. Do not use near open flame or excessive heat. The flash point is 100 - 138°F (38 - 59°C). If you become dizzy, get fresh air and medical aid immediately. If contact with eyes is made, wash your eyes and get medical aid immediately.

15. Clean parts (except motor) in drycleaning solvent.

WARNING

Compressed air used for cleaning purposes will not exceed 30 psi (207 kPa). Do not direct compressed air against skin. Use goggles or full face shield.

16. Clean motor by blowing off dust and dirt with compressed air. If necessary to remove oil or grease, use a cloth dampened with drycleaning solvent.

17. Inspect parts for cracks, breaks, and damage.

18. Inspect heater core for bent fins, loose tubes, leaks, and damage.

19. Inspect motor for damage. Check brushes for serviceability.

20. Repair consists of replacement of damaged parts.

ASSEMBLY

21. Position switch (48) in heater frame and install two lockwashers (47) and screws (46). Install knob (45) on switch and install screw (44). Connect wires to switch and remove tags.

22. Position resistor (43) in heater frame and install two screws (42), flat washers (41), lockwashers (40), and nuts (39). Connect wires (38) to resistor and remove tags.

23. Place fan guard (34) on radiator core (35) and install four screws (36) and lockwashers (37). Position fan guard and radiator core in heater frame and install four clips (33), screws (30), lockwashers (31), and flat washers (32).

4-24. CAB HEATER ASSEMBLY (cont)

ASSEMBLY (cont)

24. Install two brushes (29) in motor (26) and install two caps (28).

25. Install fan (27) on motor (26) and tighten setscrew. Position motor and fan in heater frame and install four capscrews (25), flat washers (24), lockwashers (23), and nuts (22). Connect motor wires (21) to connecting block and remove tags.

INSTALLATION

26. Place two manifold gaskets (20) on input and output manifolds. While feeding input conduit (12) through heater bracket, position heater (19) on cab wall and on manifolds. Ensure gaskets do not slip out of place. Install four screws (15), lockwashers (14), and nuts (13). Install two flat washers (18), lockwashers (17), and nuts (16).

27. Connect conduit nut (11) on input conduit (12). Connect input wires (10) to electrical block and remove tags.

28. Position lower grille (9) on heater frame and install seven screws (6), lockwashers (7), and flat washers (8).

29. Open input cutoff valve (4) and output cutoff valve (5).

30. Set battery switch to CLOSE. Set #1 heater switch to ON. Check for leakage and proper operation.

31. Position cover (3) on heater frame and install two screws (1) and lockwashers (2).

4-25. HEATER LINES, HOSES, AND FITTINGS

This task covers:

a. Removal b. Cleaning c. Inspection d. Repair
e. Installation

INITIAL SETUP

Tools

Tool kit SC4940-97-CL-E16
Drycleaning solvent (Item 23, Appendix E)

Material/Parts

Antiseize tape (Item 25, Appendix E)

REMOVAL

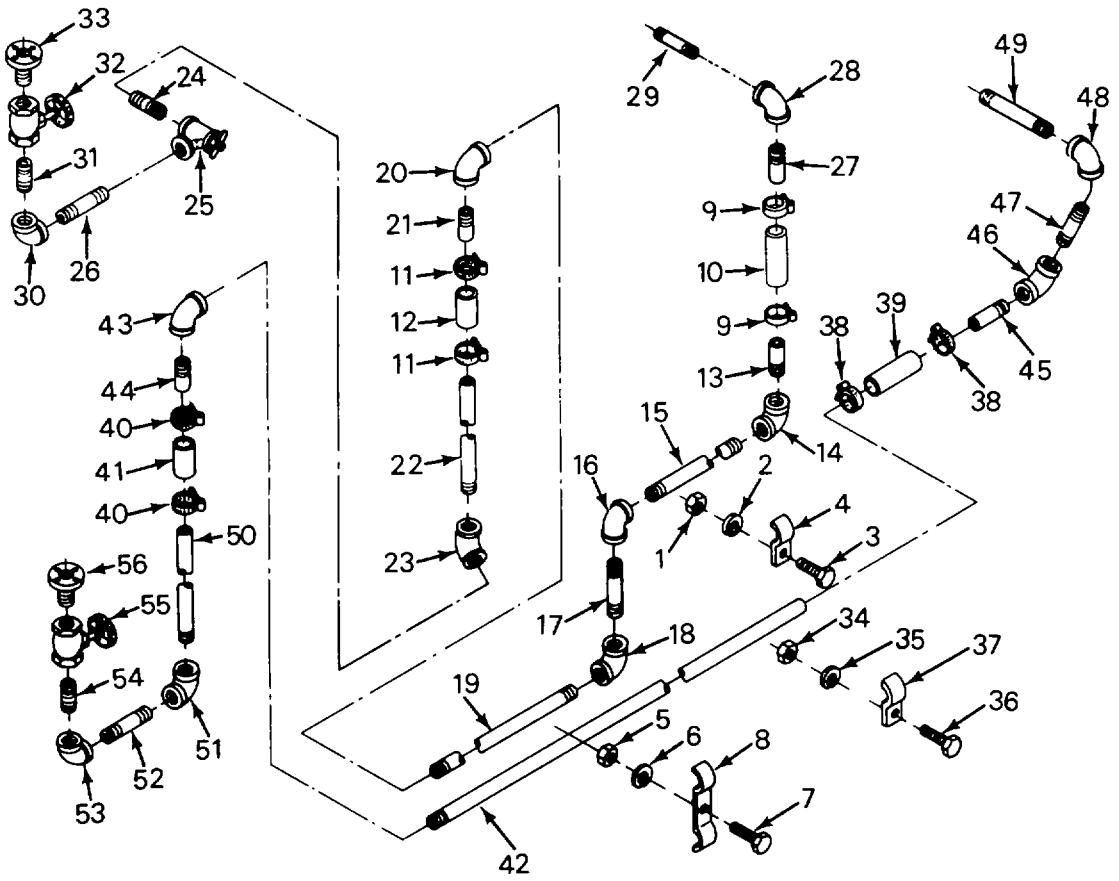

4-25. HEATER LINES, HOSES, AND FITTINGS (cont)

REMOVAL (cont)

1. Remove nut (1), lockwasher (2), bolt (3), and clamp (4).

2. Remove three nuts (5), lockwashers (6), bolts (7), and double clamps (8).

3. Loosen two hose clamps (9) and remove flexible hose (10).

4. Loosen two hose clamps (11) and remove flexible hose (12).

5. Remove nipple (13), 90-degree elbow (14), piping (15), 90-degree elbow (16), piping (17), 90-degree elbow (18), piping (19), 90-degree elbow (20), and nipple (21) as a unit.

6. Remove piping (22), 45-degree elbow (23), nipple (24), tee and pet cock assembly (25), and nipple (26).

7. Remove nipple (27), 90-degree elbow (28), reducer (29), and nipple (30).

8. Remove 90-degree elbow (31), nipple (32), valve (33), and welded nipple and flange assembly (34).

9. Remove nut (35), lockwasher (36), bolt (37), and clamp (38).

10. Loosen two clamps (39) and remove hose (40).

11. Loosen two clamps (41) and remove hose (42).

12. Remove piping (43), 90-degree elbow (44), and nipple (45) as a unit.

13. Remove nipple (46), 90-degree elbow (47), nipple (48), 45-degree elbow (49), and nipple (50).

14. Remove piping (51), 90-degree elbow (52), nipple (53), 90-degree elbow (54), nipple (55), valve (56), and welded nipple and adapter assembly (57).

4-25. HEATER LINES, HOSES, AND FITTINGS (cont)

CLEANING, INSPECTION, AND REPAIR

WARNING

- **Drycleaning solvent P-D-680 is toxic and flammable. Wear protective goggles and gloves and use only in a well-ventilated area. Avoid contact with skin, eyes, and clothes and don't breathe vapors. Do not use near open flame or excessive heat. The flash point is 100 - 138°F (38 - 59°C). If you become dizzy, get fresh air and medical aid immediately. If contact with eyes is made, wash your eyes and get medical aid immediately.**

- **Compressed air used for cleaning purposes will not exceed 30 psi (207 kPa). Do not direct compressed air against skin. Use goggles or full face shield.**

15. Clean parts with drycleaning solvent dry with compressed air..

16. Inspect parts for cracks, breaks, and damage. Inspect flexible hoses for cuts, deterioration, and weakened areas.

17. Repair consists of replacement of defective parts.

INSTALLATION

NOTE

Apply antiseize tape to all pipe threads before installing.

18. Install welded nipple and adapter assembly (57), valve (56), nipple (55), 90degree elbow (54), nipple (53), 90-degree elbow (52), and piping (51).

19. Install nipple (50), 45-degree elbow (49), nipple (48), 90-degree elbow (47), and nipple (46).

20. Install nipple (45), 90-degree elbow (44), and piping (43) as a unit.

21. Install hoses (42) and (40), two hose clamps (41), and two hose clamps (39). Tighten clamps. 22. Install clamp (38), bolt (37), lockwasher (36), and nut (35).

4-25. HEATER LINES, HOSES, AND FITTINGS (cont)

INSTALLATION (cont)

23. Install welded nipple and flange assembly (34), valve (33), nipple (32), and 90-degree elbow (31).

24. Install nipple (30), reducer (29), 90-degree elbow (28), and nipple (27).

25. Install nipple (26), tee and pet cock assembly (25), nipple (24), 45-degree elbow (23), and piping (22).

26. Install nipple (21), 90-degree elbow (20), piping (19), 90-degree elbow (18), piping (17), 90-degree elbow (16), piping (15), 90-degree elbow (14), and nipple (13) as a unit.

27. Install flexible hoses (12) and (10), two hose clamps (11), two hose clamps (9), three double clamps (8), bolts (7), lockwashers (6), and nuts (5).

28. Install clamp (4), bolt (3), lockwasher (2), and nut (1).

4-26. SAND CONTROLLER

This task covers:

a. Removal
b. Disassembly
c. Cleaning
d. Inspection
e. Repair
f. Assembly
g. Installation

INITIAL SETUP

Tools

Tool kit SC4940-97-CL-E16

Material/Parts

Antiseize tape (Item 25, Appendix E)
Drycleaning solvent (Item 23, Appendix E)

Equipment Condition

Reference	Condition Description
Para 4-28	Sander hose and fitting removed

REMOVAL

1. Disconnect air line fitting (1). Remove male half union (2) and street elbow (3).
2. Loosen hose clamp (4) and remove hose (5). Remove nipple (6).
3. Remove four nuts (7) and lockwashers (8). Remove sand controller (9) from adapter flange (10).

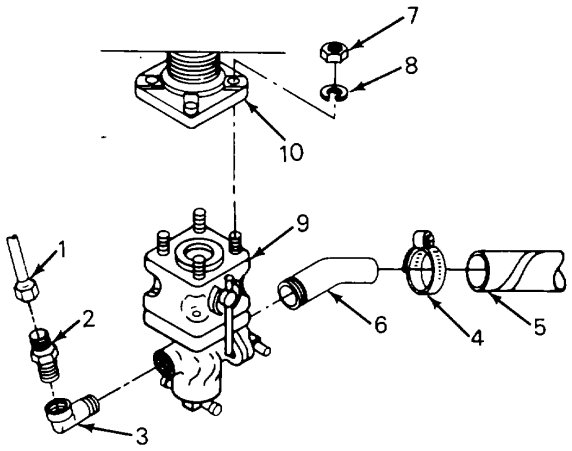

4-26. SAND CONTROLLER (cont)

DISASSEMBLY

4. Remove four nuts (11) and lockwashers (12). Remove sand shutoff body (13) and gasket (14). Remove gate seat (15).

5. Remove two roll pins (16), pivot pins (17), and gate (18). Remove two O-rings (19).

6. Remove delivery flange assembly (20). Remove gasket (21).

7. Remove pipe plug (22).

8. Remove screw (23), lockwasher (24). and controller retainer (25).

9. Remove sand controller valve (26) from sand controller body (27). Remove two O-rings (28).

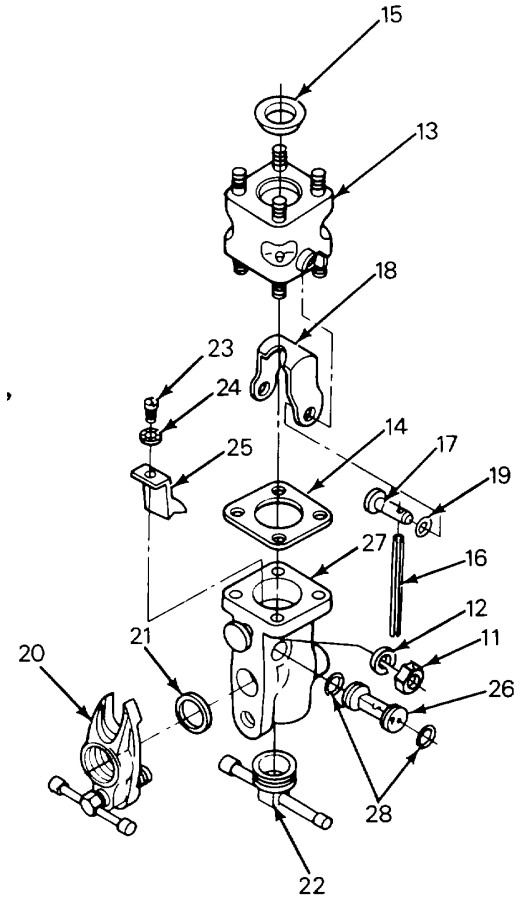

CLEANING, INSPECTION, AND REPAIR

WARNING

- **Drycleaning solvent P-D-680 is toxic and flammable. Wear protective goggles and gloves and use only in a well-ventilated area. Avoid contact with skin, eyes, and clothes and don't breathe vapors. Do not use near open flame or excessive heat. The flash point is 100 - 138°F (38 - 59°C). If you become dizzy, get fresh air and medical aid immediately. If contact with eyes is made, wash your eyes and get medical aid immediately.**

- **Compressed air used for cleaning purposes will not exceed 30 psi (207 kPa). Do not direct compressed air against skin. Use goggles or full face shield.**

10. Clean parts with drycleaning solvent and dry with compressed air.

4-26. SAND CONTROLLER (cont)

CLEANING, INSPECTION, AND REPAIR (cont)

11. Inspect parts for cracks, breaks, and damage. Inspect gate seat, gasket, and seals for serviceability.

12. Repair consists of replacement of damaged parts.

ASSEMBLY

13. Install two O-rings (28) on sand controller valve (26).Position sand controller valve in sand controller body (27).

14. Install controller retainer (25), lockwasher (24), and screw (23).

15. Install pipe plug (22).

16. Install gasket (21) in delivery flange assembly (20).Install delivery flange assembly on sand controller body (27).

17. Install two O-rings (19) on two pivot pins (17).Position gate (18) in sand shutoff body (13) and install pivot pins. Install two roll pins (16).

18. Install gate seat (15).

19. Position gasket (14) and install shutoff body (13) on sand controller body (27).Install four lockwashers (12) and nuts (11).

INSTALLATION

20. Position sand controller (9) on adapter flange (10) and install four nuts (7) and lockwashers (8).

21. Install nipple (6).Install hose (5) on nipple and tighten hose clamp (4).

22. Apply antiseize tape to threads and install street elbow (3) and male half union (2).Connect air line fitting (1).

23. Start locomotive (para 2-10 and 2-11).After air pressure buildup, check sand controller for proper operation.

4-27. SANDER CONTROL VALVE

This task covers:

a. Test b. Removal c. Installation

INITIAL SETUP

Tools	Material/Parts
Tool kit SC4940-97-CL-E16	Antiseize tape (Item 25, Appendix E)

TEST

WARNING

- **Remove rings, bracelets, wristwatches, and neck chains before working around the locomotive. Jewelry can catch on equipment and cause injury, or may short across an electrical circuit and cause severe burns or electrical shock.**
- **High voltage is used in the operation of equipment. Do not be misled by the term LOW VOLTAGE. Potentials as low as 50 volts may cause death.**

1. Open electrical equipment cabinet door and set battery switch to CLOSE.
2. Check switches, wiring, and breakers for proper operation.
3. Remove wiring cover and test valve with multimeter.
4. Check air cutout for proper operation.

REMOVAL

5. Open electrical equipment cabinet door and set battery switch to OPEN.

4-27. SANDER CONTROL VALVE (cont)

REMOVAL (cont)

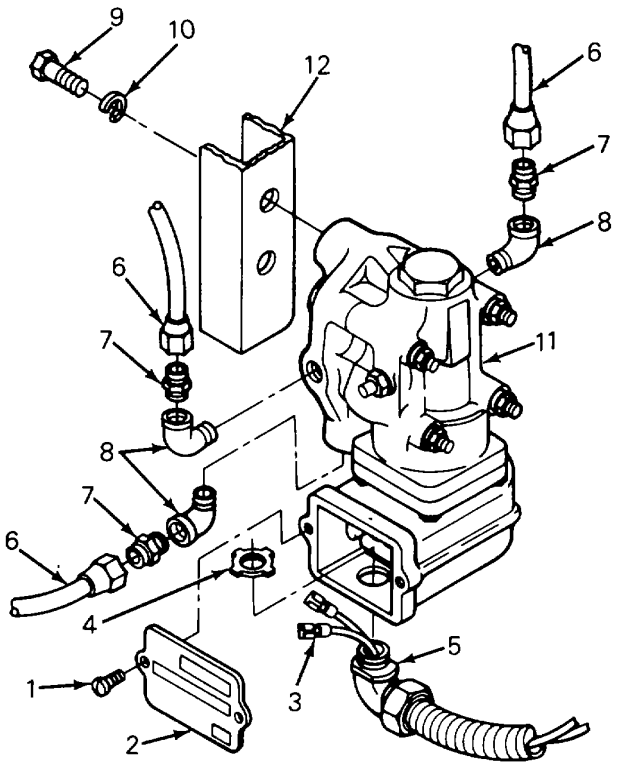

6. Remove two machine screws (1) and cover (2). Tag and disconnect wires (3). Remove conduit nut (4) and pull conduit elbow (5) from bottom of sander control valve (11).

7. Disconnect three air line fittings (6).

8. Remove three male half unions (7) and street elbows (8). Remove two capscrews (9) and lockwashers (10). Remove sander control valve (11) from bracket (12).

INSTALLATION

9. Position sander control valve (11) on bracket (12) and install two lockwashers (10) and capscrews (9).

10. Apply antiseize tape to the threads of three street elbows (8) and male half unions (7). Install street elbows and male half unions. Connect three air line fittings (6).

11. Position conduit elbow (5) in bottom of sander control valve (11) and install conduit nut (4). Connect wires (3) and remove tags. Position cover (2) on sander control valve and install two machine screws (1).

12. Open electrical equipment cabinet door and set battery switch to CLOSE.

13. Start locomotive (para 2-10 and 2-11). After air pressure buildup, check sander control valve for proper operation.

4-28. SANDER HOSE ASSEMBLY

This task covers:

a. Removal b. Installation

INITIAL SETUP

Tools

Tool kit SC4940-97-CL-E16

REMOVAL

1. Remove two bolts (1), lock-washers (2), and clamps (3).
2. Loosen two hose clamps (4) and remove hose (5) and pipe (6). Remove hose clamps. If necessary remove nipple (7).

INSTALLATION

3. If removed, install nipple (7). Install two hose clamps (4). Install hose (5) on nipple. Install pipe (6) in hose. Tighten hose clamps.
4. Position pipe (6) and install two clamps (3), lockwashers (2), and bolts (1). Do not tighten bolts.
5. Adjust pipe (6) so that end of pipe is 3 inches (76.2 mm) above rails. Tighten bolts (1).

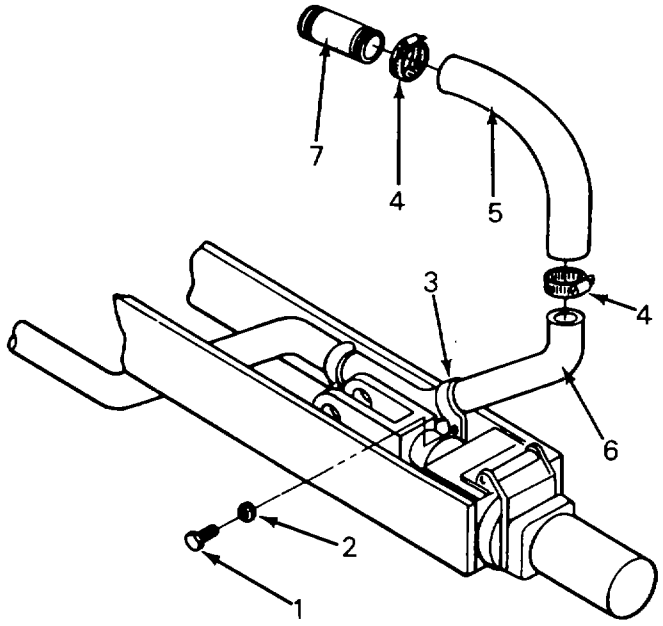

4-29. SWITCHES, CIRCUIT BREAKERS, AND INDICATING LIGHTS

This task covers:

a. Test b. Removal c. Installation

INITIAL SETUP

Tools

Tool kit SC4940-97-CL-E16

TEST

WARNING

- **Remove rings, bracelets, wristwatches, and neck chains before working around the locomotive. Jewelry can catch on equipment and cause injury, or may short across an electrical circuit and cause severe burns or electrical shock.**
- **High voltage is used in the operation of equipment. Do not be misled by the term LOW VOLTAGE. Potentials as low as 50 volts may cause death.**

1. Open electrical equipment cabinet door and set battery switch to OPEN.
2. Tag and disconnect electrical leads from defective switches. Use multimeter and test switches for continuity in all positions.
3. Use a multimeter and check circuit breaker for continuity. Test circuit breaker in both ON and OFF positions.

REMOVAL

4. Pushbutton switches.
   a Tag and disconnect electrical wires.
   b Remove nut (1) and lockwasher (2).
   c Remove pushbutton switch (3).
5. Toggle switches.
   a Tag and disconnect electrical wires.
   b Remove nut (4) and switch (5).

4-29. SWITCHES, CIRCUIT BREAKERS, AND INDICATING LIGHTS (cont)

REMOVAL (cont)

6 Rotary switches.

a. Tag and disconnect electrical wires. Remove screw (6), lockwasher (7), and knob (8).

b. Remove four screws (9), lockwashers (10), and plate (11). Remove switch (12).

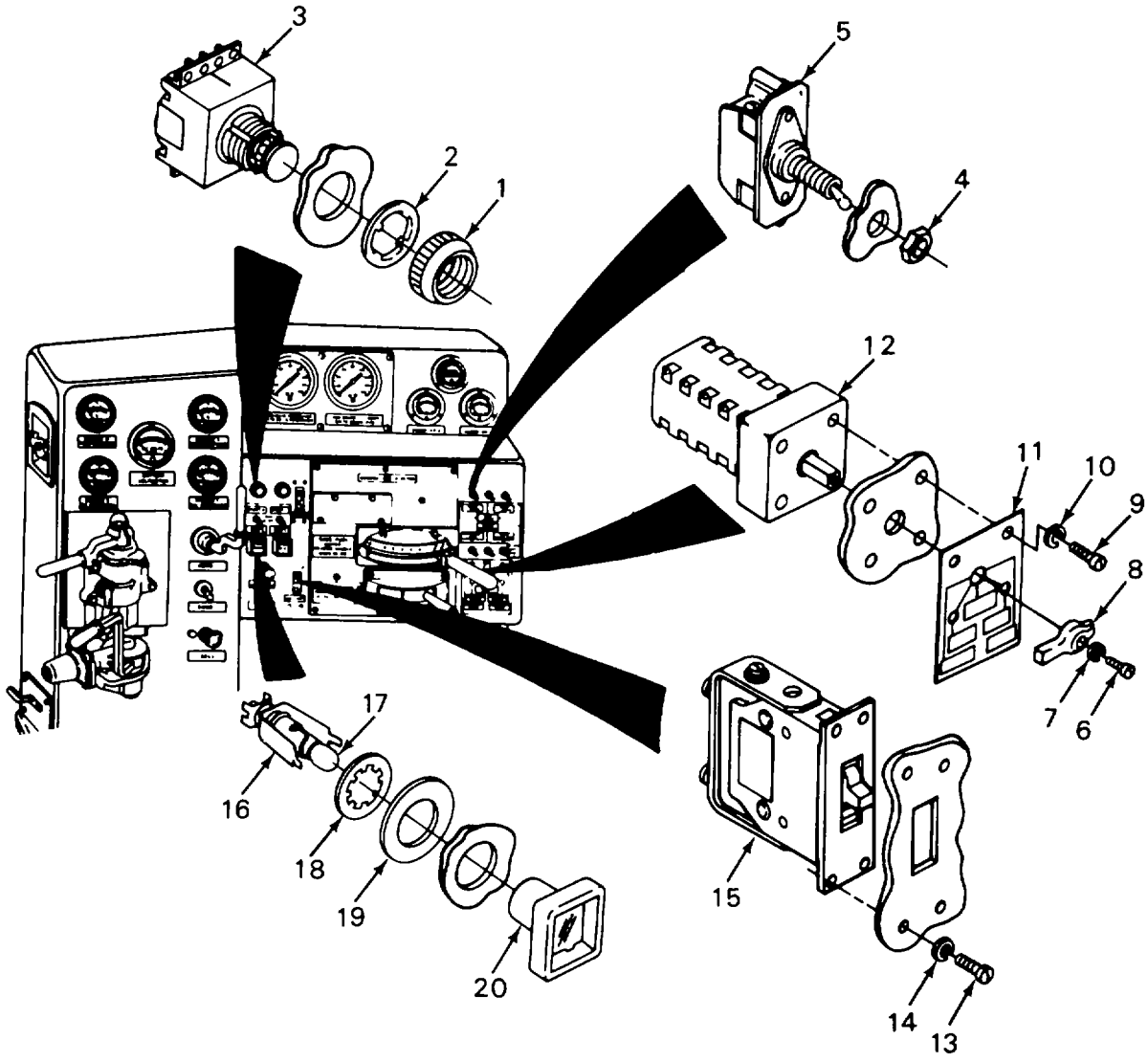

4-29. SWITCHES, CIRCUIT BREAKERS, AND INDICATING LIGHTS (cont)

REMOVAL (cont)

7 Circuit breaker.

a. Tag and disconnect electrical wires.

b. Remove two screws (13) and lockwashers (14). Remove circuit breaker (15).

8 Indicating light.

a. Remove light socket (16) and bulb (17).

b. Remove push-on mounting nut (18), flat washer (19), and lens (20).

INSTALLATION

9 Indicating Light.

a. Position lens (20) in control panel and install flat washer (19) and push-on mounting nut (18).

b. Install bulb (17) and socket (16) in lens (20).

10 Circuit breaker.

a. Position circuit breaker (15) in control panel and install two lockwashers (14) and screws (13).

b. Connect electrical wires and remove tags.

11 Rotary switches.

a. Position switch (12) in back of control panel and install plate (11), four lockwashers (10), and screws (9). Install knob (8), lockwasher (7), and screw (6).

b. Connect electrical wires and remove tags.

12. Toggle switches

a. Position switch (5) in control panel stand and install nut (4).

b. Connect electrical wires and remove tags.

13. Pushbutton switches.

a. Position pushbutton switch (3) in back of control panel and install lockwasher (2) and nut (1).

b. Connect electrical wires and remove tags.

4-30. STORAGE BATTERIES, CONNECTIONS, AND BATTERY COMPARTMENT

This task covers:

a. Inspection b. Cleaning c. Test
d. Removal e. Repair f. Installation

INITIAL SETUP

Tools

Tool kit SC4940-97-CL-E16

Test Equipment

Hydrometer 6630-00-105-1418

Material/Parts

Bicarbonate of soda (Item 22, Appendix E)
Distilled water (Item 4, Appendix E)
Petrolatum (Item 19, Appendix E)
Rags (Item 20, Appendix E)
Rubberized paint (Item 18, Appendix E)

INSPECTION

1. Inspect battery compartment for cracks, dents, rust, and corrosion.
2 Inspect wooden blocking for serviceability.

CLEANING

WARNING

- **Remove rings, bracelets, wristwatches, and neck chains before working around the locomotive. Jewelry can catch on equipment and cause injury, or may short across an electrical circuit and cause severe burns or electrical shock.**
- **High voltage is used in the operation of equipment. Do not be misled by the term LOW VOLTAGE. Potentials as low as 50 volts may cause death.**
- **Be careful not to short out battery terminals. Do not smoke or use open flame near batteries. Batteries may explode from a spark. Battery acid is harmful to skin and eyes.**

CAUTION

Keep vent plugs in place. Do not allow soda solution to get into the cells. It will neutralize the electrolyte and lower cell capacity.

NOTE

This system is a 32-volt system consisting of four storage batteries.

4-30. STORAGE BATTERIES, CONNECTIONS, AND BATTERY COMPARTMENT (cont)

CLEANING (cont)

3. Before making test, open electrical equipment cabinet door and set battery switch to OPEN. Clean battery as follows:
    a. Remove corrosion on connector bolts, lugs, and cables by washing with water/soda solution (1 pound bicarbonate of soda to 1 gallon of water).
    b. Rinse with clean water and allow to air dry.
    c. Remove vent caps and clean out the vents in the cap.

TEST

4. Check the specific gravity as follows:
    a. Place the hydrometer in a cell and remove enough electrolyte to fill the barrel of the syringe to a level which will permit the hydrometer to float freely without touching the barrel at either top or bottom. Allow the rubber bulb to expand completely and hold syringe by the neck of the bulb.
    b. Shake the syringe gently to be sure hydrometer is floating freely.
    c. Hold the syringe at eye level.
    d. Record the indication at the point at which the electrolyte level appears to intersect the stem of the hydrometer.
        (1) The fully charged specific gravity varies in different types of batteries and is shown on the battery nameplate. Readings should register in the vicinity of 1280 points.
        (2) The discharged specific gravity (not shown on the battery nameplate) also varies with battery type but is usually around 130 to 140 points lower than the fully charged specific gravity.
        (3) A specific gravity reading 100 points below the full charge value is a warning of either battery or charging problems. A specific gravity reading between cells of the same battery that differs more than 20 points may indicate a dead cell.
5. Add distilled water to 1/8 inch (3.2 mm) below the bottom of the filling tube in the cover.
6. Check the tightness of the connector bolts and apply a thin coating of petrolatum. Wipe off excess with a clean rag.

4-30. STORAGE BATTERIES, CONNECTIONS, AND BATTERY COMPARTMENT (cont)

REMOVAL

WARNING

- **Remove rings, bracelets, wristwatches, and neck chains before working around the locomotive. Jewelry can catch on equipment and cause injury, or may short across an electrical circuit and cause severe burns or electrical shock.**
- **High voltage is used in the operation of equipment. Do not be misled by the term LOW VOLTAGE. Potentials as low as 50 volts may cause death.**
- **Be careful not to short out battery terminals. Do not smoke or use open flame near batteries. Batteries may explode from a spark. Battery acid is harmful to skin and eyes.**

7. Open electrical equipment cabinet door and set battery switch to OPEN.
8. Open door (1) and remove eight nuts (2), bolts (3), and five cables (4) from batteries (5).

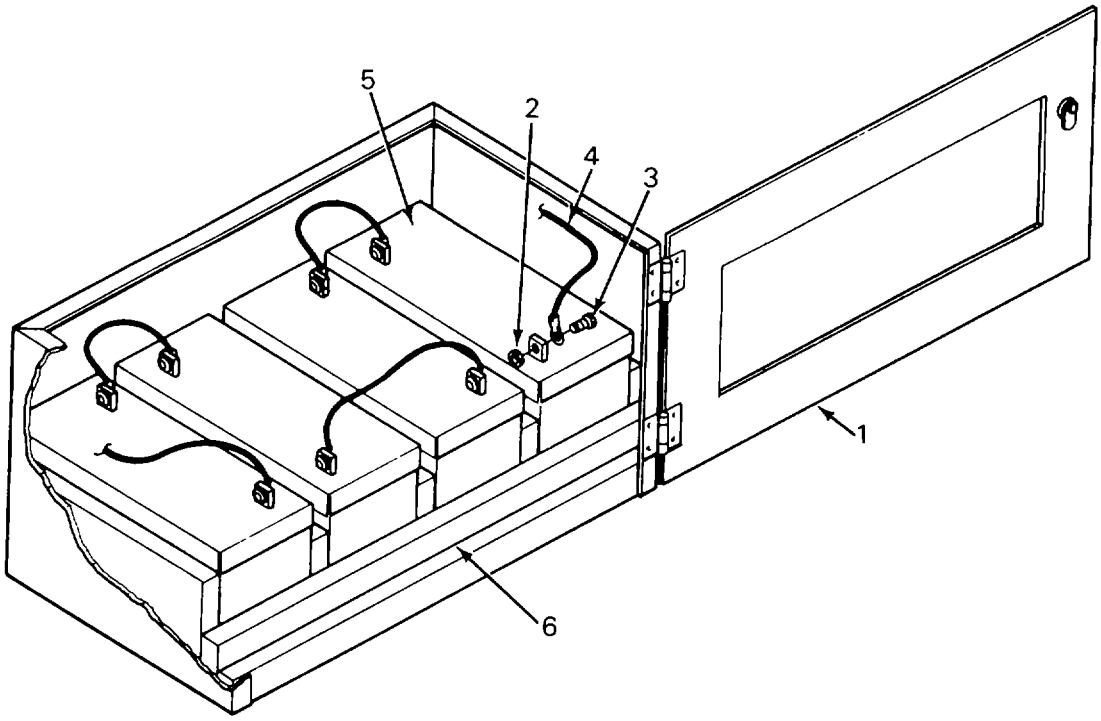

9. Lift four batteries (5) from battery compartment. Note the location of the wooden blocking (6).

4-30. STORAGE BATTERIES, CONNECTIONS, AND BATTERY COMPARTMENT (cont)

REPAIR

10. Repair cracks, dents, and door of battery compartment by welding and straightening as required. Grind welds smooth.
11. Remove corrosion by washing compartment with a water/soda solution.
12. Remove rust by sanding and using a metal conditioner. Prime bare metal and paint with rubberized paint.

INSTALLATION

WARNING

- **Remove rings, bracelets, wristwatches, and neck chains before working around the locomotive. Jewelry can catch on equipment and cause injury, or may short across an electrical circuit and cause severe burns or electrical shock.**
- **High voltage is used in the operation of equipment. Do not be misled by the term LOW VOLTAGE. Potentials as low as 50 volts may cause death.**
- **Be careful not to short out battery terminals. Do not smoke or use open flame near batteries. Batteries may explode from a spark. Battery acid is harmful to skin and eyes.**

13. Place batteries (5) in position in battery compartment. Install wooden blocking (6) as noted in removal.
14. Clean battery connectors and ends of five cables (4). Place cables on battery connectors. Install eight bolts (3) and nuts (2). Apply a thin coating of petrolatum. Wipe off excess with a clean rag.
15. Close and secure door (1).

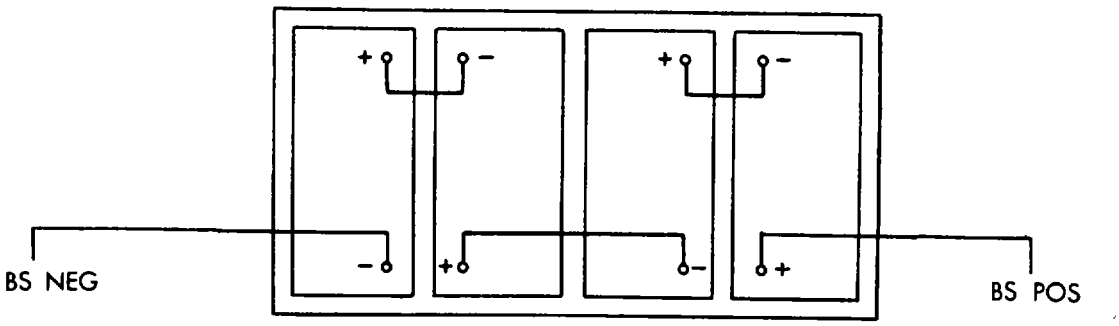

4-31. MULTIPLE-UNIT CONTROL JUMPER

This task covers:

a. Test
b. Inspection
c. Removal
d. Installation

INITIAL SETUP

Tools

Tool kit SC4940-97-CL-E16

TEST & INSPECTION

1. Inspect jumper for burned, corroded, or broken terminal contacts.
2. Use multimeter and test for continuity.

REMOVAL

3. Remove multiple-unit control jumper (1) from receptacle.
4. Remove two nuts (2), lockwashers (3), screws (4), and clamp (5). Remove multiple-unit control jumper (1).

INSTALLATION

5. Position multiple-unit control jumper (1) in clamp (5). Install two screws (4), lockwashers (3), and nuts (2).
6. Plug multiple-unit control jumper (1) in receptacle.

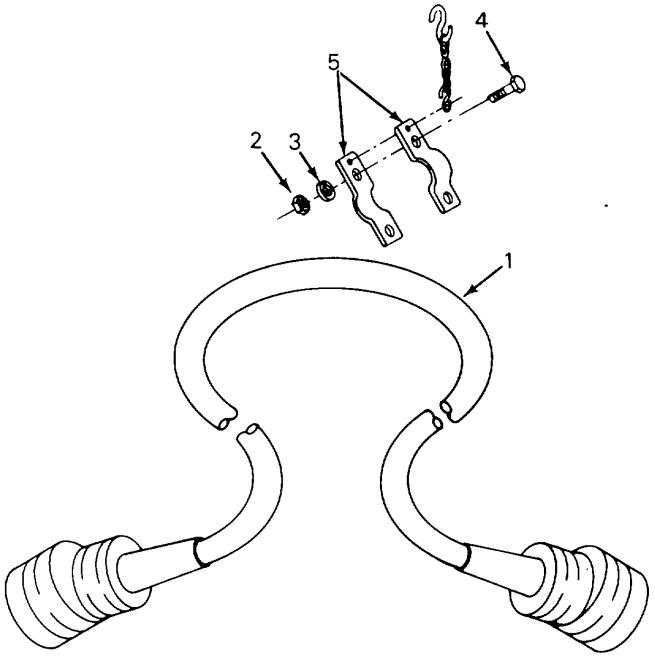

4-32. HEADLAMP

This task covers:

a. Test
b. Inspection
c. Removal
d. Installation

INITIAL SETUP

Tools

Tool kit SC4940-97-CL-E16

TEST AND INSPECTION

WARNING

- **Remove rings, bracelets, wristwatches, and neck chains before working around the locomotive. Jewelry can catch on equipment and cause injury, or may short across an electrical circuit and cause severe burns or electrical shock.**
- **High voltage is used in the operation of equipment. Do not be misled by the term LOW VOLTAGE. Potentials as low as 50 volts may cause death.**

1. Open electrical equipment cabinet door and set battery switch to CLOSE.
2. Set applicable headlight switch to ON. Use a multimeter and test for 32 volts at headlamp terminals.
3. Inspect headlight for burned, corroded, or broken terminals and wires.
4. Open electrical equipment cabinet door and set battery switch to OPEN. Set applicable headlight switch to OFF.

4-32. HEADLAMP (cont)

REMOVAL

5. Loosen door latch (1).

CAUTION

Lamp housing may slide off upper mounting stud, fall, and cause damage to equipment.

6. Swing door (2) open and remove screws (3) from sealed beam (6). Tag and disconnect electrical wires.
7. Loosen latch (4) and lower retainer (5).
8. Remove sealed beam (6) from retainer (5).

INSTALLATION

9. Position sealed beam (6) in retainer (5). Raise retainer into position and tighten latch (4).
10. Connect electrical wires to sealed beam (6) and remove tags. Install screws (3).
11. Swing door (2) down and fasten door latch (1).
12. Set battery switch to CLOSE. Set applicable headlight switch to ON. Check headlight for proper operation.

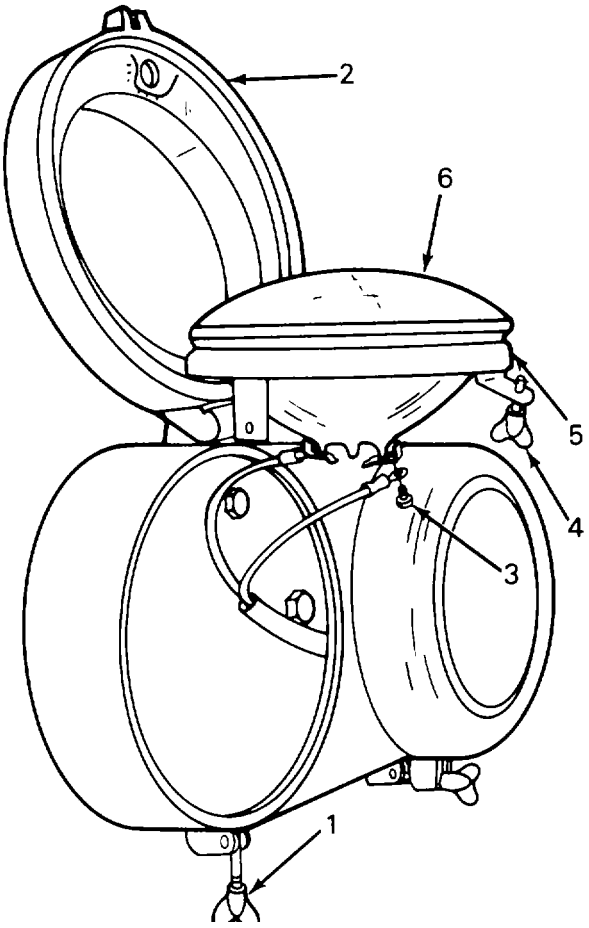

4-33. STEP, COWLING, GAGE, AND CAB ELECTRICAL EQUIPMENT CABINET LIGHTS AND WIRING

This task covers:

a. Test
b. Repair
c. Inspection
d. Removal
e. Installation

INITIAL SETUP

Tools	Material/Parts
Tool kit SC4940-97-CL-E16	Electrical tape (Item 26, Appendix E)

TEST

WARNING

- **Remove rings, bracelets, wristwatches, and neck chains before working around the locomotive. Jewelry can catch on equipment and cause injury, or may short across an electrical circuit and cause severe burns or electrical shock.**
- **High voltage is used in the operation of equipment. Do not be misled by the term LOW VOLTAGE. Potentials as low as 50 volts may cause death.**

1. Open electrical equipment cabinet door and set battery switch to CLOSE.
2. Remove bulb and use a multimeter to check to see if voltage is reaching the light.
3. Use multimeter and check for voltage across switch.
4. Open electrical equipment cabinet door and set battery switch to OPEN.

INSPECTION

5. Inspect electrical wiring for disconnected and broken wires and damaged insulation.

REMOVAL

6. Set the switch of the affected light to OFF.
7. Remove light bulbs as follows:
   a. Step. Remove light bulb (1).
   b. Cowling. Loosen screw (2) and remove wire guard (3). Remove glass globe (4). Remove light bulb (5).

4-33. STEP, COWLING, GAGE, AND CAB AND ELECTRICAL EQUIPMENT CABINET LIGHTS AND WIRING (cont)

REMOVAL (cont)

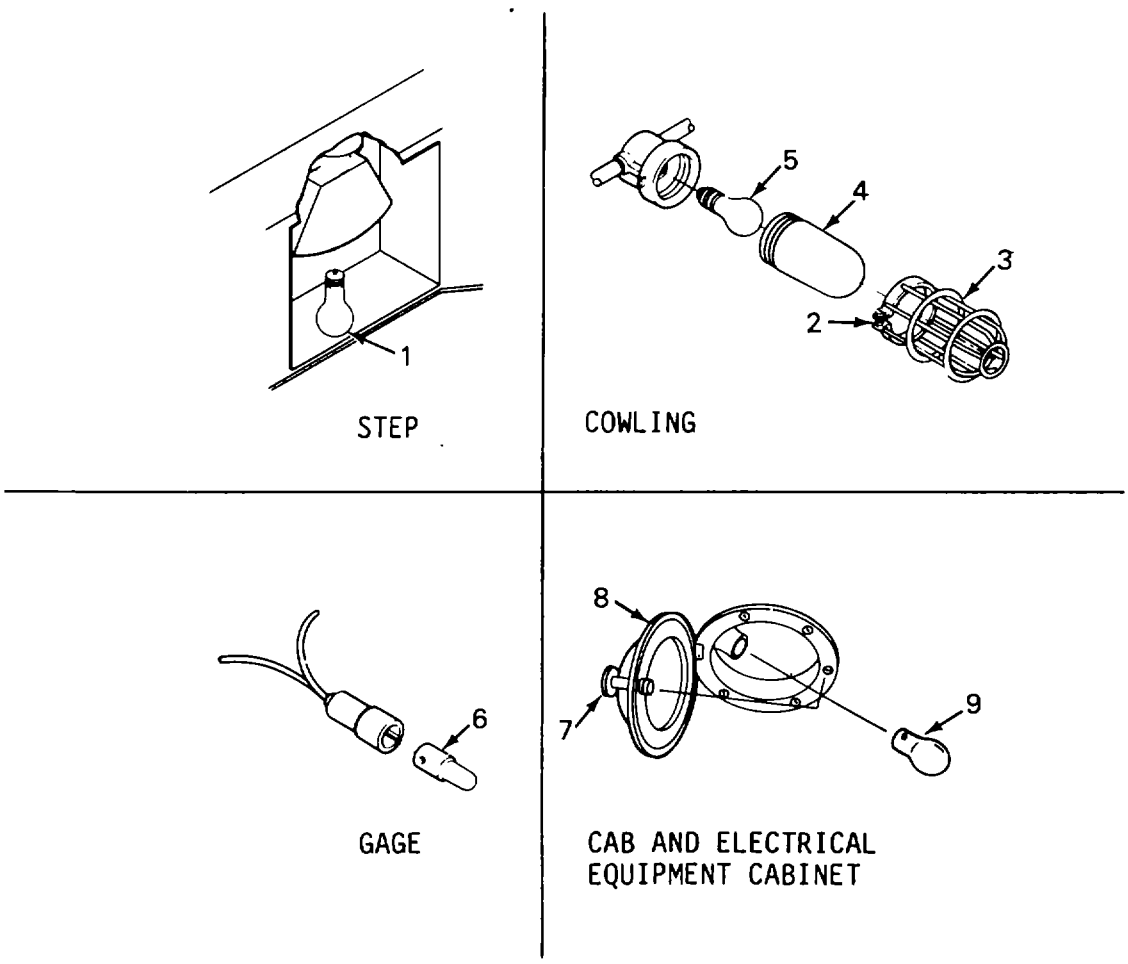

c. Gage. Push in and twist light bulb (6) counterclockwise and remove light bulb.

d. Cab and Electrical Equipment Cabinet. Loosen screw (7) and swing lens (8) down. Push in and twist light bulb (9) counterclockwise and remove bulb.

4-33. STEP, COWLING, GAGE, AND CAB AND ELECTRICAL EQUIPMENT CABINET LIGHTS AND WIRING (cont)

REPAIR

7. Repair frayed or broken wires by splicing and wrapping with electrical tape.
8. Replace wires if required.

INSTALLATION

9. Install light bulbs as follows:
    a. Cab and Electrical Equipment Cabinet. Install light bulb (9) by pushing in, and turning clockwise. Swing lens (8) into place and tighten screw (7).
    b. Gage. Install light bulb (6) by pushing in and twisting clockwise.
    c. Cowling. Install light bulb (5). Install glass globe (4) and wire guard (3). Tighten screw (2).
    d. Step. Install light bulb (1).
10. Set battery switch to CLOSE. Set applicable light switch to ON. Check light for proper operation.

4-34. BATTERY CHARGING ALTERNATOR BELTS

This task covers:

a. Inspection b. Removal c. Installation
d. Adjustment

INITIAL SETUP

Tools

Tool kit SC4940-97-CL-E16

INSPECTION

1. Inspect belts for cracks, wear, and looseness.

REMOVAL

2. Remove bolt (1), lockwasher (2), bolt (3), lockwasher (4), and flat washer (5). Remove guard (6).
3. Loosen nut (7) and bolt (8).
4. Push alternator (9) in toward engine and remove two belts (10).

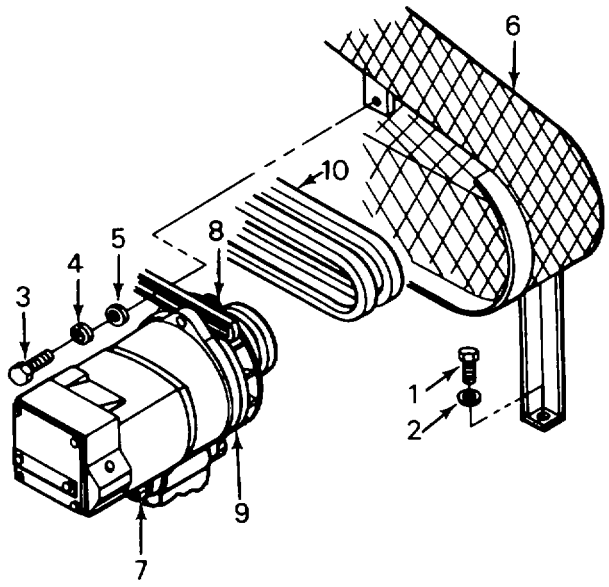

INSTALLATION

NOTE

If one belt is damaged, both belts should be replaced as a matched set so tension adjustment will be equal.

5. Position belts (10) around engine pulley and alternator (9) pulley. Tighten bolt (8) and nut (7).
6. Position guard (6) and install flat washer (5), lockwasher (4), bolt (3), lockwasher (2), and bolt (1).

ADJUSTMENT

7. For proper adjustment of belts, refer to TM 5-2815-233-14.

4-35. MAIN GENERATOR BRUSHES

This task covers:

a. Inspection b. Removal c. Installation
d. Adjustment

INITIAL SETUP

Tools

Tool kit SC4940-97-CL-E16
Spring scale 4910-00-366-1476

Material/Parts

Soft stone (Item 24, Appendix E)

INSPECTION

WARNING

• Remove rings, bracelets, wristwatches, and neck chains before working around the locomotive. Jewelry can catch on equipment and cause injury, or may short across an electrical circuit and cause severe burns or electrical shock.

• High voltage is used in the operation of equipment. Do not be misled by the term LOW VOLTAGE. Potentials as low as 50 volts may cause death.

CAUTION

Snapping of brush springs when raising and lowering to release dirt may chip or damage the carbon brush.

1. Open electrical equipment cabinet door and set battery switch to OPEN.
2. Unlatch and raise cover (1) until larger part of the holes will clear the screwheads. Remove cover

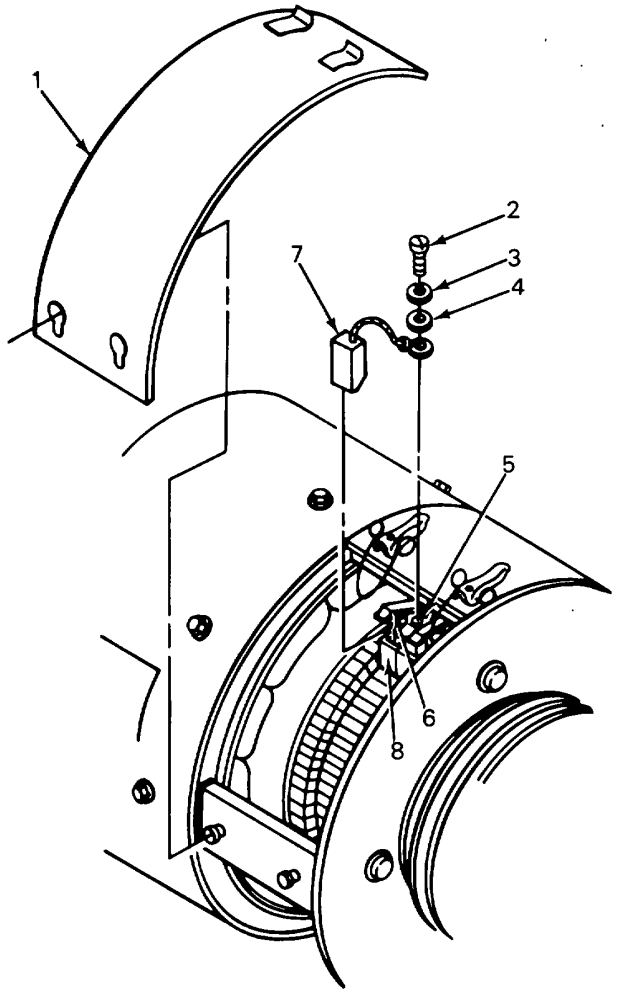

4-35. MAIN GENERATOR BRUSHES (cont)

INSPECTION (cont)

3. Check for sticking, broken, or cracked brushes. Check for wear below 1-1/4 inches (38.1 mm). If brushes will reach 1-1/4 inches (38.1 mm) before next inspection, replace brushes.
4. Work brushes up and down in brush holders to loosen carbon deposits and other foreign material. Check that brushes move freely.
5. Examine brush holders (8) for signs of arcing or binding of brushes.
6. Check clearance between bottom of brush holder (8) and commutator. Clearance must be 1/16 to 3/32 inch (1.6 to 2.4 mm).

REMOVAL

NOTE

Brushes can be removed and replaced without removing brush holders.

7. Remove screw (2), lockwasher (3), and flat washer (4).
8. Unhook spring (5) and raise brush lever (6). Remove brush (7) from brush holder (8).

INSTALLATION

NOTE

The brushes are beveled on the bottom of the long end. Install the brushes with bevel fitting the surface of commutator.

9. Raise brush lever (6) and install brush (7) in brush holder (8). Hook spring (5) in notch on brush holder. Install screw (2), lockwasher (3), and flat washer (4).

ADJUSTMENT

10. Check the thickness of the new brush in the holder for a clearance of 0.020 inch maximum inch (0.51 mm). Brushes with side clearance in excess of 0.020 inch (0.51 mm) will rattle, chip, or break and must be replaced.

4-35. MAIN GENERATOR BRUSHES (cont)

ADJUSTMENT (cont)

NOTE

Adjust brush sets to equal pressure. Unequal pressure will cause unequal current distribution in the brushes.

11. Attach spring scale to each brush lever (6) directly over brush (7) and pull straight up in line with the brush travel until the spring just lifts clear of the brush. Spring pressure must be 3.25 to 3.75 lb (1.45 to 1.70 kg). Replace brush holder if specifications cannot be met.
12. Start locomotive in accordance with paragraphs 2-10 and 2-11. Apply soft stone to commutator and run locomotive at half speed (no load) until commutator is polished and brushes are seated.
13. Install cover (1).

4-36. EXHAUST MUFFLER AND EXTENSION PIPE

This task covers:

a. Inspection b. Removal c. Installation

INITIAL SETUP

Tools

Tool kit SC4940-97-CL-E16

INSPECTION

1. Inspect exhaust muffler and extension pipe for holes, splits, and plugged or burned-out muffler.

REMOVAL

WARNING

• Remove rings, bracelets, wristwatches, and neck chains before working around the locomotive. Jewelry can catch on equipment and cause injury, or may short across an electrical circuit and cause severe burns or electrical shock.

• High voltage is used in the operation of equipment. Do not be misled by the term LOW VOLTAGE. Potentials as low as 50 volts may cause death.

2. Open electrical equipment cabinet door and set battery switch to OPEN.
3. Remove eight nuts (1), lockwashers (2), flat washers (3), and screws (4). If necessary cut wires ties (5) and position resistor cages (6) and (7) out of the way.

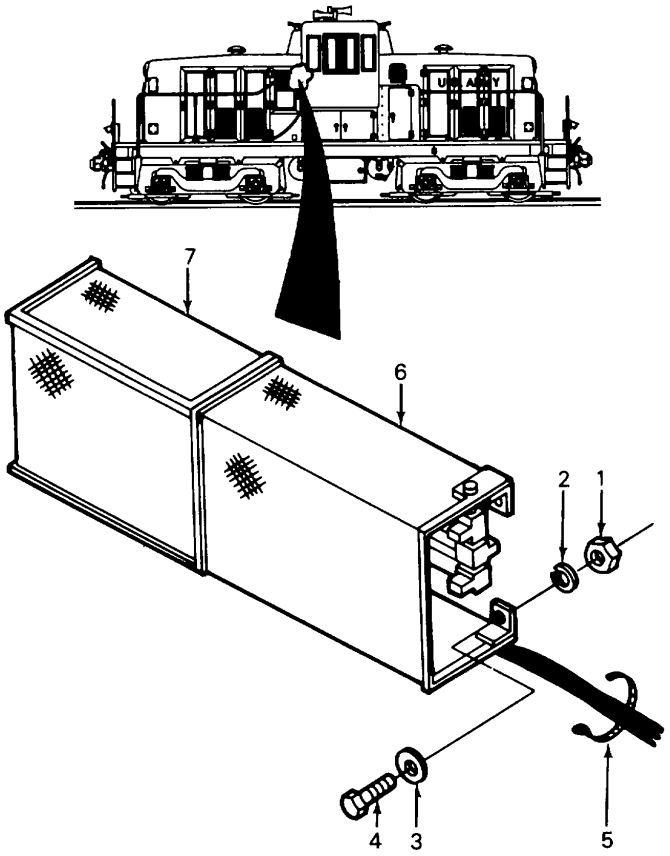

4-36. EXHAUST MUFFLER AND EXTENSION PIPE (cont)

REMOVAL (cont)

4. Remove eight nuts (8), lock-washers (9), bolts (10), and gasket (11).
5. Remove nut (12), lockwasher (13), screw (14), screw (15), lock-washer (16), flat washer (17), screw (18), and screen (19).
6. Remove nut (20) and remove clamp (21) and extension pipe (22).
7. Remove nut (23) and remove rain cap (24).
8. Remove nut (25), lockwasher (26), capscrew (27), and clamp (28).
9. Remove six bolts (29) and lockwashers (30) and remove housing (31).
10. Remove four nuts (32), lock-washers (33), and bolts (34). Remove two muffler clamps (35) and muffler (36) from bracket (37).

INSTALLATION

11. Position muffler (36) in bracket (37) and install two muffler clamps (35), four bolts (34), lockwashers (33), and nuts (32).
12. Position housing (31) in place and install six lockwashers (30) and bolts (29).
13. Install clamp (28), capscrew (27), lockwasher (26), and nut (25).
14. Install rain cap (24) and install nut (23).

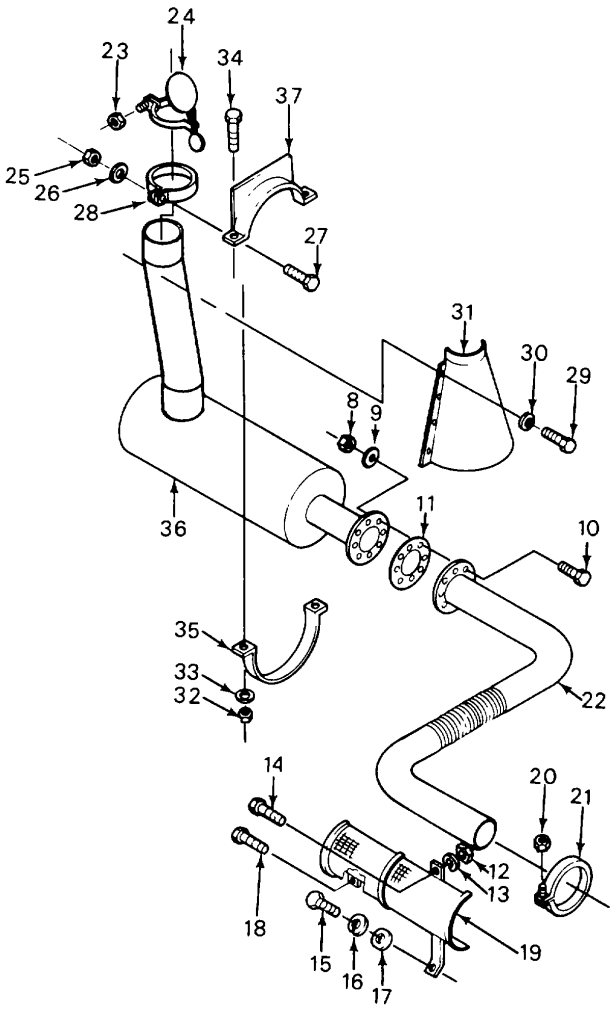

4-36. EXHAUST MUFFLER AND EXTENSION PIPE (cont)

INSTALLATION (cont)

15. Position lower end of extension pipe (22) against turbocharger outlet and install clamp (21) and nut (20).
16. Position screen (19) and install screw (18), flat washer (17), lockwasher (16), screw (15), screw (14), lockwasher (13), and nut (12).
17. Position end of extension pipe (22) with gasket (11) on muffler (36), and install eight bolts (10), lockwashers (9), and nuts (8).
18. Position resistor cages (7) and (6) on cab wall and install eight screws (4), flat washers (3), lockwashers (2), and nuts (1). If removed, install wire ties (5).

4-37. FUEL SYSTEM LINES AND FITTINGS

This task covers:

a. Removal
b. Disassembly
c. Cleaning
d. Inspection
e. Repair
f. Assembly
g. Installation

INITIAL SETUP

Tools

Tool kit SC4940-97-CL-E16

Material/Parts

Drycleaning solvent (Item 23, Appendix E)
Antiseize tape (Item 25, Appendix E)

REMOVAL AND DISASSEMBLY

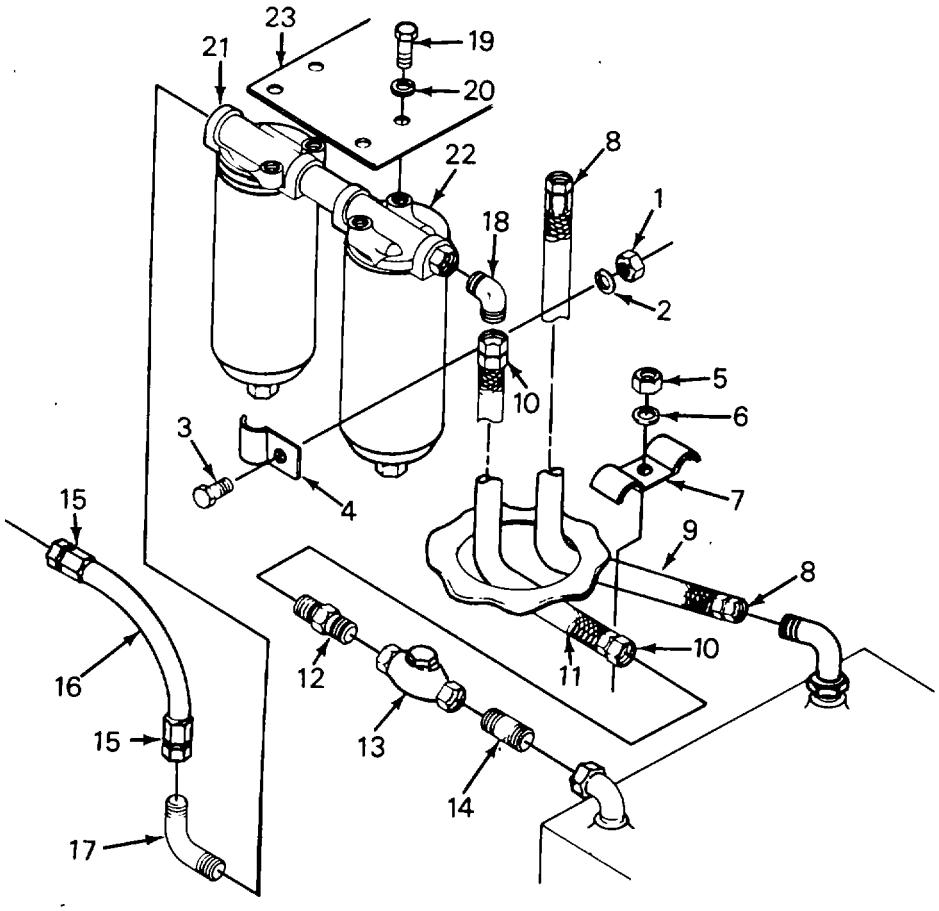

4-37. FUEL SYSTEM LINES AND FITTINGS (cont)

REMOVAL AND DISASSEMBLY (cont)

NOTE

Hoses and lines of both engines are removed and installed in the same manner.

1. Remove nut (1), lockwashers (2), screw (3), and clamp (4). Remove two nuts (5), lockwashers (6), and clamps (7).
2. Disconnect two fuel line fittings (8) and remove hose (9).
3. Disconnect two fuel line fittings (10) and remove hose (11), male adapter (12), check valve (13), and nipple (14).
4. Disconnect two fuel line fittings (15) and remove hose (16).
5. Remove two 90-degree elbows (17) and (18) from fuel filters (21) and (22).
6. Remove four capscrews (19), lockwashers (20), and fuel filters (21) and (22) from bracket (23).

CLEANING, INSPECTION, AND REPAIR

WARNING

- **Drycleaning solvent P-D-680 is toxic and flammable. Wear protective goggles and gloves and use only in a well-ventilated area. Avoid contact with skin, eyes, and clothes and don't breathe vapors. Do not use near open flame or excessive heat. The flash point is 100 - 138°F (38 - 59°C). If you become dizzy, get fresh air and medical aid immediately. If contact with eyes is made, wash your eyes and get medical aid immediately.**

- **Compressed air used for cleaning purposes will not exceed 30 psi (207 kPa). Do not direct compressed air against skin. Use goggles or full face shield.**

7. Clean parts with drycleaning solvent and dry with compressed air.
8. Inspect metal lines and fittings for cracks, breaks, and signs of leakage.
9. Inspect hoses for deterioration, signs of leakage, and damage.
10. Repair consists of replacement of damaged parts.

4-37. FUEL SYSTEM LINES AND FITTINGS (cont)

ASSEMBLY AND INSTALLATION

NOTE

Apply antiseize tape to all pipe threads before installing.

11. Position fuel filters (22) and (21) on bracket (23) and install four lockwashers (20) and capscrews (19).
12. Install 90-degree elbows (18) and (17) on filters (21) and (22). Position hose (16) and connect two fuel line fittings (15).
13. Install nipple (14), check valve (13), and male adapter (12).
14. Position hose (11) and connect two fuel line fittings (10).
15. Position hose (9) and connect two fuel line fittings (8).
16. Install two clamps (7), lockwasher (6), and nuts (5).
17. Install clamp (4), screw (3), lockwashers (2), and nut (1).
18. Refer to TM 5-2815-233-14 for instructions on priming of fuel system.
19. Start the locomotive (para 2-10 and 2-11) and check fuel lines and fittings for leakage.

4-38. COOLING SYSTEM HOSES AND CLAMPS

This task covers:

a. Removal b. Installation

INITIAL SETUP

Tools	Material/Parts
Tool kit SC4940-97-CL-E16	Antifreeze (Item 25, Appendix E)

REMOVAL

1. Open drain cock (1) and drain cooling system.
2. Loosen four hose clamps (2) and remove two hoses (3) and pipe (4).

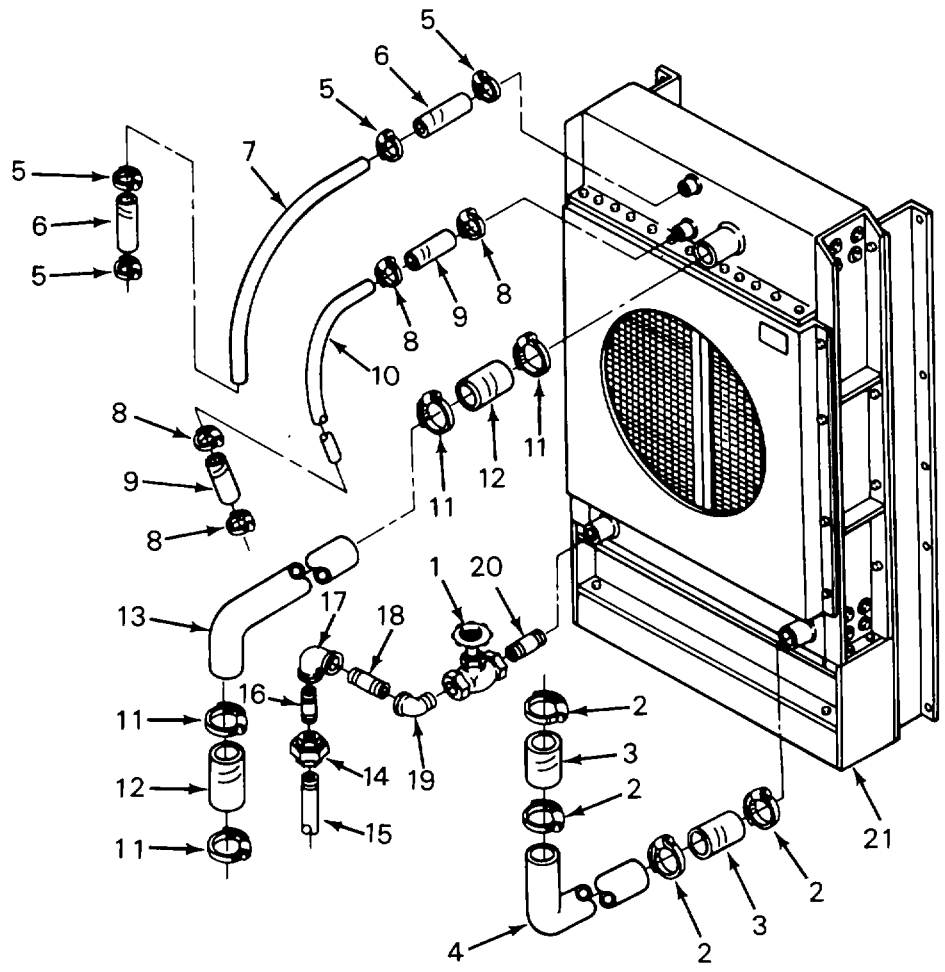

4-38. COOLING SYSTEM HOSES AND CLAMPS (cont)

REMOVAL (cont)

3. Loosen four hose clamps (5) and remove two hoses (6) and pipe (7).
4. Loosen four hose clamps (8) and remove two hoses (9) and pipe (10).
5. Loosen four hose clamps (11) and remove two hoses (12) and pipe (13).
6. Separate union (14) and remove pipe (15), nipple (16), 90-degree elbow (17), nipple (18), 90-degree street elbow (19), drain cock (1), and nipple (20) from radiator (21).

INSTALLATION

NOTE

Apply antiseize tape to all pipe threads before installation.

7. Install nipple (20) in radiator (21) and install drain cock (1), 90-degree street elbow (19), nipple (18), 90-degree elbow (17), nipple (16), pipe (15), and union (14).
8. Install pipe (13), four hose clamps (11), and two hoses (12). Tighten clamps.
9. Install pipe (10), four hose clamps (8), and two hoses (9). Tighten clamps.
10. Install pipe (7), four hose clamps (5), and two hoses (6). Tighten clamps.
11. Install pipe (4), four hose clamps (2), and two hoses (3). Tighten clamps.
12. Close drain cock (1) and add proper mixture of coolant to cooling system.

4-39. COOLING FAN BELTS

This task covers:

a. Inspection b. Removal c. Installation
d. Adjustment

INITIAL SETUP

Tools

Tool kit SC4940-97-CL-E16

INSPECTION

1. Inspect belts for cracks, wear, and looseness.

REMOVAL

2. Remove two bolts (1), lockwashers(2), and nut (3). Remove guard (4).
3. Remove four capscrews (5), lock-washers (6), and flat washers (7). Remove adjusting screw (8).
4. Move fan pulley (9) away from engine and remove three belts (10).

INSTALLATION

NOTE

If one belt is damaged, both belts should be replaced as a matched set so tension adjustment will be equal.

5. Position three belts (10) around engine pulley and fan pulley (9).
6. Position fan pulley (9) against engine and install four flat washers (7), lockwashers (6), and capscrews (5). Install adjusting screw (8).

ADJUSTMENT

7. For proper adjustment of belts, refer to TM 5-2815-233-14.
8. Position guard (4) and install nut (3), two flat washers (2), and bolts (1).

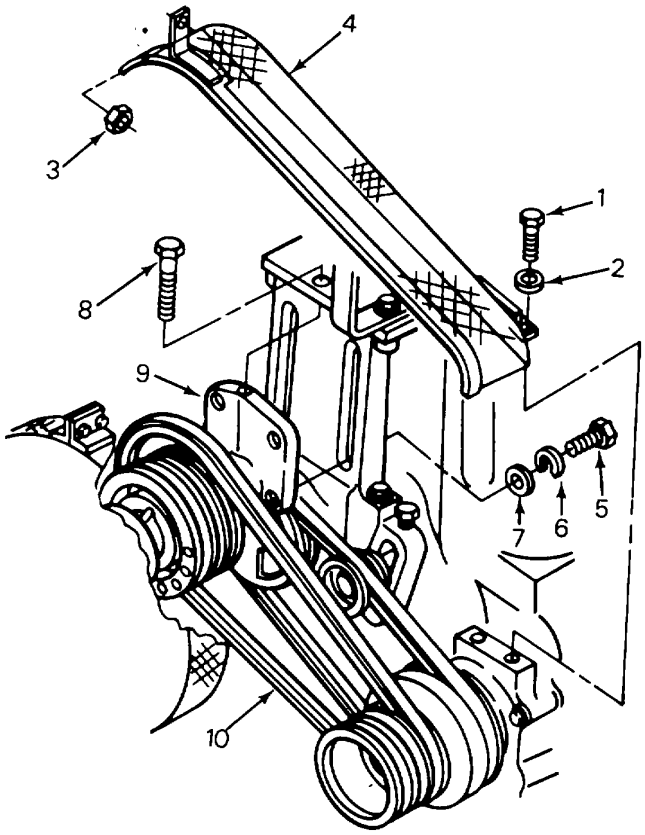

4-40. ENGINE BLOCK HEATER CLAMPS AND HOSES

This task covers:

a. Removal b. Installation

INITIAL SETUP

Tools	Material/Parts
Tool kit SC4940-97-CL-E16	Antiseize Tape (Item 25, Appendix 4)

NOTE

Drain cooling system before performing removal procedures.

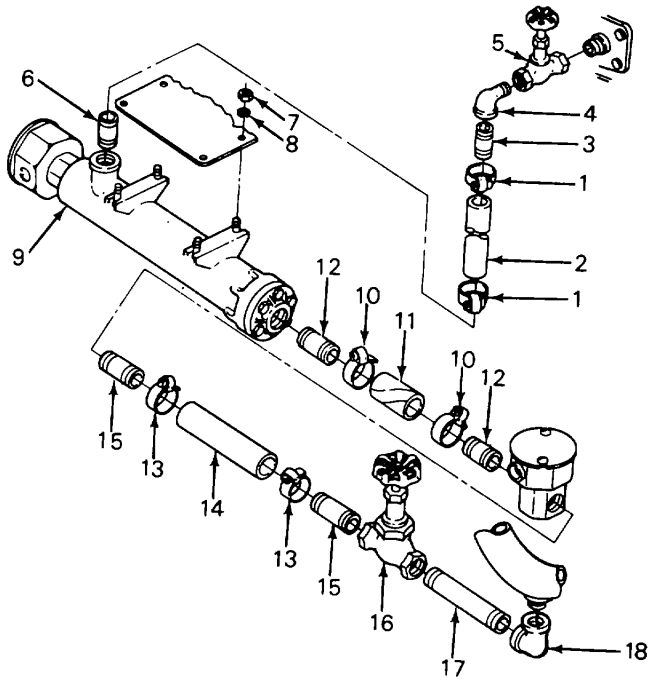

REMOVAL

1. Loosen two hose clamps (1) and remove hose (2), nipple (3), 90-degree street elbow (4), valve (5), and nipple (6). Remove four nuts (7), flat washers (8), and heater (9).
2. Remove two hose clamps (10), hose (11), and two nipples 12).
3. Remove two hose clamps (13), hose (14), two nipples (15), valve (16), nipple (17), and 90-degree elbow (18).

INSTALLATION

NOTE

Apply antiseize tape to all pipe threads before installing.

4. Install 90-degree elbow (18), nipple (17), valve (16), two nipples (15), hose clamps (13), and hose (14). Tighten hose clamps.
5. Install two nipples (12), hose clamps (10), and hose (11). Tighten hose clamps.
6. Position heater (9) on bracket and install four flat washers (8) and nuts (7).
7. Install nipple (6), valve (5), 90-degree street elbow (4), nipple (3), two hose clamps (1), and hose (2). Tighten hose clamps.

4-41. AIR COMPRESSOR BELTS

This task covers:

a. Removal b. Installation c. Adjustment

INITIAL SETUP

Tools

Tool kit SC4940-97-CL-E16

REMOVAL

1. Loosen four compressor mounting bolts (1).
2. Loosen locknut (2) and belt adjusting nut (3).
3. Push compressor toward generator and remove three drive belts (4).

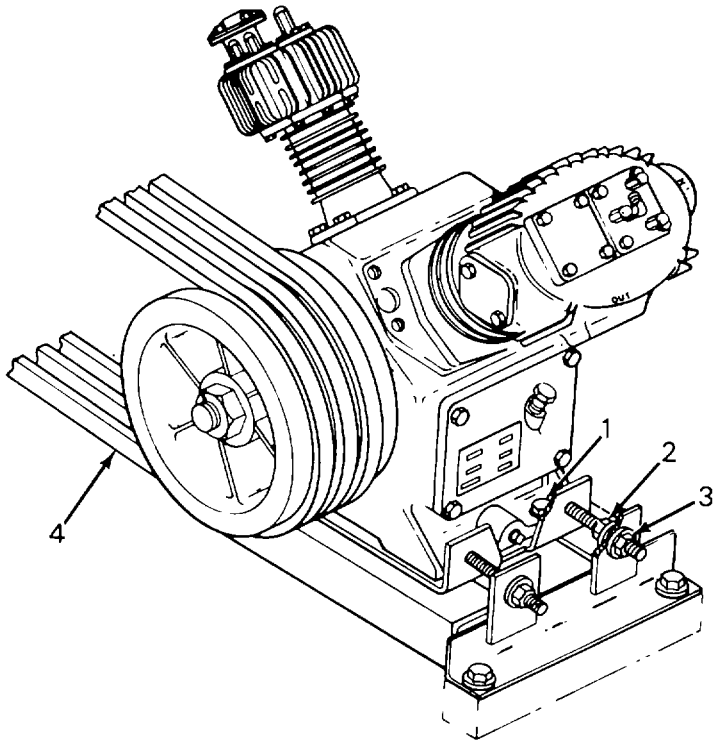

4-41. AIR COMPRESSOR BELTS (cont)

INSTALLATION AND ADJUSTMENT

NOTE

- **Check alinement after installing belts and adjusting belt tension.**
- **If one belt is damaged, all belts should be replaced as a matched set so tension adjustment will be equal.**

4. Install three drive belts (4) on pulleys.

NOTE

The need for correct adjustment of drive belts cannot be overemphasized.

5. Adjust belt adjusting nut (3) until slack in upper portion of belt is 3/4 inch (19 mm) at midpoint between pulleys. Tighten locknut (2).
6. Tighten four mounting bolts (1).
7. If new belts were installed, start locomotive (para 2-10 and 2-11) and operate engine for at least 15 minutes to allow belts to stretch.
8. Shut down engine (para 2-17)
9. Readjust belt tension as required.

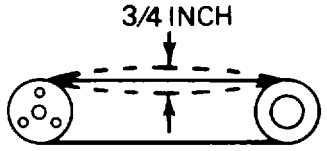

4-42. AIR COMPRESSOR AIR CLEANER INTAKE

This task covers:

a. Removal
b. Disassembly
c. Cleaning
d. Inspection
e. Repair
f. Assembly
g. Installation

INITIAL SETUP

Tools	Material/Parts
Tool kit SC4940-97-CL-E16	Drycleaning solvent (Item 23, Appendix E) Lubricating oil (Item 14, Appendix E) Rags (Item 20, Appendix E)

REMOVAL AND DISASSEMBLY

1. Remove wingnut (1), flat washer (2), cork gasket (3), and cover (4) and remove filter element (5) from base (6). Remove base from elbow (7), if required.

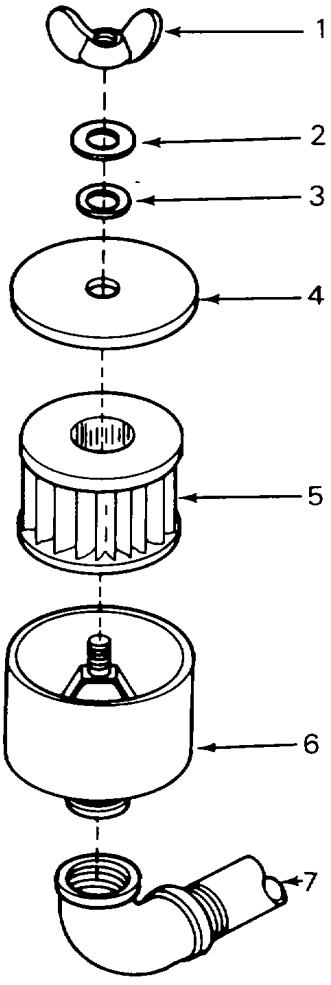

CLEANING, INSPECTION, AND REPAIR

WARNING

- **Drycleaning solvent P-D-680 is toxic and flammable. Wear protective goggles and gloves and use only in a well-ventilated area. Avoid contact with skin, eyes, and clothes and don't breathe vapors. Do not use near open flame or excessive heat. The flash point is 100 138°F (38 59°C). If you become dizzy, get fresh air and medical aid immediately. If contact with eyes is made, wash your eyes and get medical aid immediately.**

- **Compressed air used for cleaning purposes will not exceed 30 psi (207 kPa). Do not direct compressed air against skin. Use goggles or full face shield.**

2. Clean cover (4) and base (6) with Drycleaning solvent. Dry thoroughly with compressed air.

3. Inspect filter element (5) for damage and serviceability.

4. Repair consists of replacement of damaged parts.

4-42. AIR COMPRESSOR AIR CLEANER INTAKE (cont)

ASSEMBLY AND INSTALLATION

5. Lubricate filter element (5) in accordance with LO 55-2210-224-12.

6. If removed, install base (6) in elbow (7).

7. Position filter element (5) in base (6) and install cover (4), cork gasket (3), flat washer (2), and wingnut (1).

4-43. HANDBRAKE

This task covers:

a. Test b. Removal c. Cleaning d. Inspection e. Installation

INITIAL SETUP

Tools	Material/Parts
Tool kit SC4940-97-CL-E16	Drycleaning solvent (Item 23, Appendix E)

TEST

1. Remove screw (1) and cover (2). Set and release handbrake while inspecting gears for proper operation.

REMOVAL

2. Remove screw (1) and cover (2).
3. Pull down weighted end of chain (6). Slide chain snubber (5) up chain.
4. Remove pin (3). Remove weight (4) and chain snubber (5).
5. Pull chain (6) from brake assembly (9).
6. Remove three nuts (7) and lockwashers (8). Remove brake assembly (9).

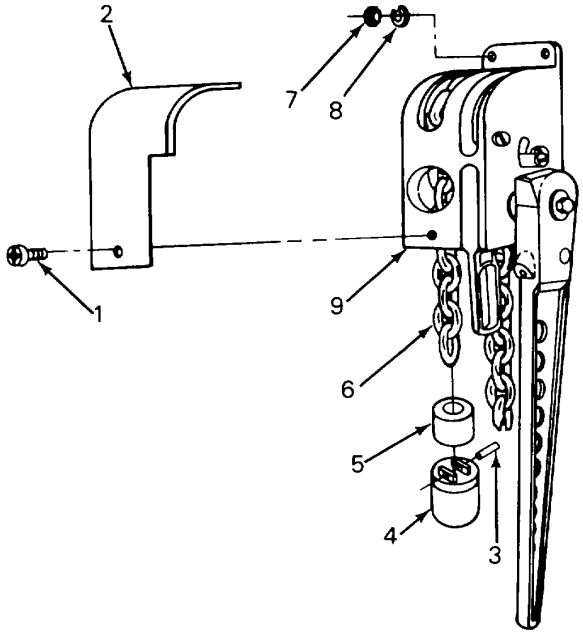

4-43. HANDBRAKE (cont)

CLEANING AND INSPECTION

WARNING

- **Drycleaning solvent P-D-680 is toxic and flammable. Wear protective goggles and gloves and use only in a well-ventilated area. Avoid contact with skin, eyes, and clothes and don't breathe vapors. Do not use near open flame or excessive heat. The flash point is 100 - 138°F (38 - 59°C). If you become dizzy, get fresh air and medical aid immediately. If contact with eyes is made, wash your eyes and get medical aid immediately.**

- **Compressed air used for cleaning purposes will not exceed 30 psi (207 kPa). Do not direct compressed air against skin. Use goggles or full face shield.**

7. Clean metal parts with drycleaning solvent. Dry thoroughly with compressed air.

8. Clean chain snubber (5) with detergent and water.

9. Inspect parts for cracks, breaks, and damage.

10. Inspect the teeth on the pinion, ratchets, and chain drum for wear.

11. Inspect the springs for serviceability.

INSTALLATION

12. Position brake assembly (9) on cab wall and install three nuts (7) and lockwashers (8).

13. Feed a wire through the front bottom hole of housing, over chain drum, and out the rear bottom hole of the housing. Attach the wire to chain (6) and pull chain over drum and out the front bottom hole. Slide chain snubber (5) up chain. Position weight (4) on chain and install pin (3). Slide snubber down over weight.

14. Lubricate in accordance with LO 55-2210-224-12.

15. Position cover (2) and install screw (1).

4-44. TRAINLINE AIR HOSES AND FITTINGS

This task covers:

a. Removal b. Repair c. Installation

INITIAL SETUP

Tools

Tool kit SC4940-97-CL-E16

REMOVAL

NOTE

Gasket (3) in trainline air hoses (1) can be replaced without removing the air hoses from the locomotive. To remove and replace the gasket, do step 2 only.

1. Remove air hose (1) from angle cock (2).

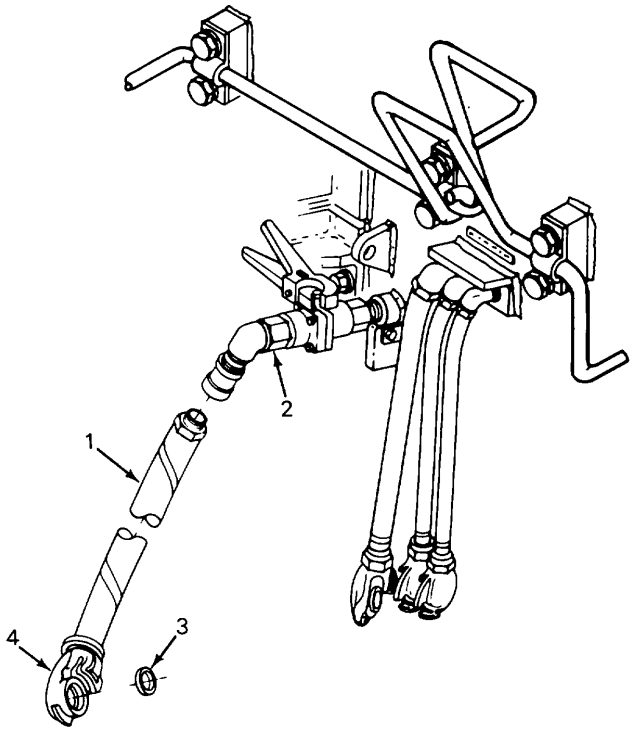

REPAIR

2. Repair consists of replacing gasket in glad hand as follows:

   a. Insert screwdriver between gasket (3) and glad hand (4) and pry gasket from groove.

   b. Start gasket (3) into groove of glad hand (4) and continue to work the gasket into place by hand, forcing the outside edge of gasket away from the coupling body so that it can be pressed or allowed to snap completely into the groove.

INSTALLATION

3. Install air hose (1) on angle cock (2).

4. Connect glad hand (4) to another glad hand. Open angle cock (2) and check for air leaks.

4-45. FOUNDATION BRAKESHOE AND BRAKEHEAD

This task covers:

a. Removal
b. Disassembly
c. Cleaning
d. Inspection
e. Repair
f. Assembly
g. Installation

INITIAL SETUP

Tools	Material/Parts
Tool kit SC4940-97-CL-E16	Drycleaning solvent (Item 23, Appendix E)

REMOVAL AND DISASSEMBLY

1. Adjust slack adjuster head (1) to obtain maximum clearance between brakeshoe (3) and wheel.
2. Remove retaining key (2).
3. Pry brakeshoe (3) from its fit in brakehead (4) and remove brakeshoe.
4. Remove cotter pins (5) and (6), and pins (7) and (8). Remove brakehead (4) from brake lever (9).

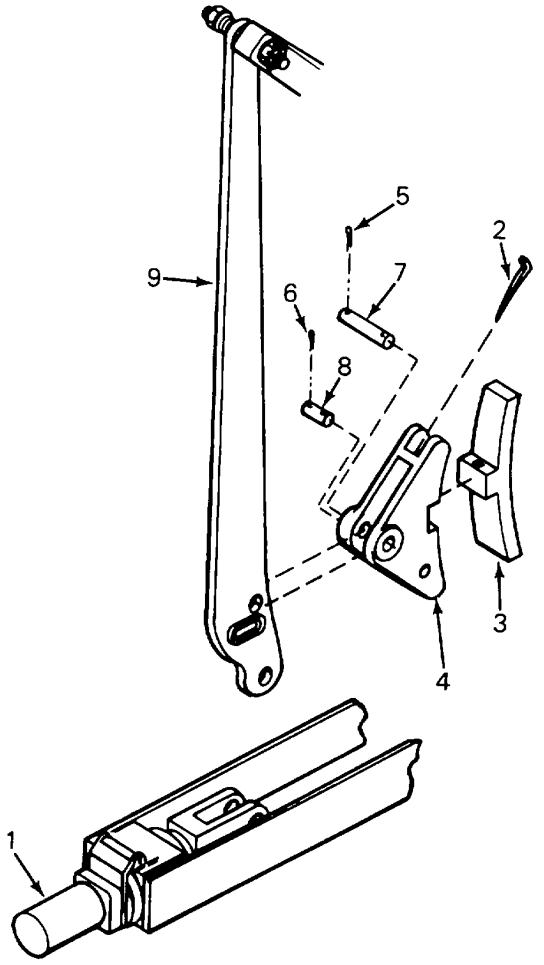

4-45. FOUNDATION BRAKESHOE AND BRAKEHEAD

CLEANING, INSPECTION, AND REPAIR

WARNING

- **Drycleaning solvent P-D-680 is toxic and flammable. Wear protective goggles and gloves and use only in a well-ventilated area. Avoid contact with skin, eyes, and clothes and don't breathe vapors. Do not use near open flame or excessive heat. The flash point is 100 - 138°F (38 - 59°C). If you become dizzy, get fresh air and medical aid immediately. If contact with eyes is made, wash your eyes and get medical aid immediately.**

- **Compressed air used for cleaning purposes will not exceed 30 psi (207 kPa). Do not direct compressed air against skin. Use goggles or full face shield.**

5. Clean parts in drycleaning solvent. Dry with compressed air.
6. Inspect spring, spacer, and screw for cracks, breaks, and damage.
7. Repair consists of replacement of damaged parts.

ASSEMBLY AND INSTALLATION

8. Position brakehead (4) on brake lever (9) and install pins (7) and (8), and cotter pins (5) and (6).
9. Tilt brakehead (4) up and slide brakeshoe (3) down from top of wheel and into brakehead.
10. Aline keyway in brakehead (4) and brakeshoe (3) and insert brakeshoe retaining key (2).
11. Apply air brakes and check brake piston travel. Adjust brake piston travel for a measurement of 3 inches (76.2 mm) by turning slack adjuster head (1).

4-46. TRACTION MOTOR BRUSHES AND BRUSH HOLDERS

This task covers:

a. Inspection b. Removal c. Installation d. Adjustment

INITIAL SETUP

Tools	Material/Parts	Test Equipment
Tool kit SC4940-97-CL-E16	1/8-inch (3.2 mm) diameter drill rod (Item 21, Appendix E)	Small spring scale 4910-00-366-1476

INSPECTION

WARNING

- **Remove rings, bracelets, wristwatches, and neck chains before working around the locomotive. Jewelry can catch on equipment and cause injury, or may short across an electrical circuit and cause severe burns or electrical shock.**

- **High voltage is used in the operation of equipment. Do not be misled by the term LOW VOLTAGE. Potentials as low as 50 volts may cause death.**

NOTE

- **There are two commutator inspection plates or covers. Two covers are located on the side of the motor. The covers are secured with latches. Brushes can be replaced without removing brush holders.**

- **The traction motor uses carbon brushes.**

1. Open electrical equipment cabinet door and set battery switch to OPEN
2. Check for sticking, broken, or cracked brushes. Check carbon brushes for wear more than 3/4 inch (19 mm) below top of brush holder. Check metal sheaved brushes for wear of more than 1/2 inch below top of brush holder. Replace brushes, if either of these limits will be reached before next inspection
3. Use spring scale and check spring for spring tension of between 7.9 and 8.5 pounds (3.6 and 3.7 kg).

4-46 TRACTION MOTOR BRUSHES AND BRUSH HOLDERS (cont)

INSPECTION (**cont**)

4. Make sure brushes are not sticking, oily, or broken.

5. Make sure there is a clearance of 1/8 inch (1.6 mm) between brush holder and commutator.

REMOVAL

6. Disconnect latch (1) and remove two covers (2).

NOTE
If only the brushes are unserviceable, they can be replaced without removing the brush holders.

7. Remove screw (3). Lift spring (4) and remove brushes (5).

8. Disconnect electrical lead from brush holder (6). Remove bolt (7) and both halves of clamp (8) and remove brush holder.

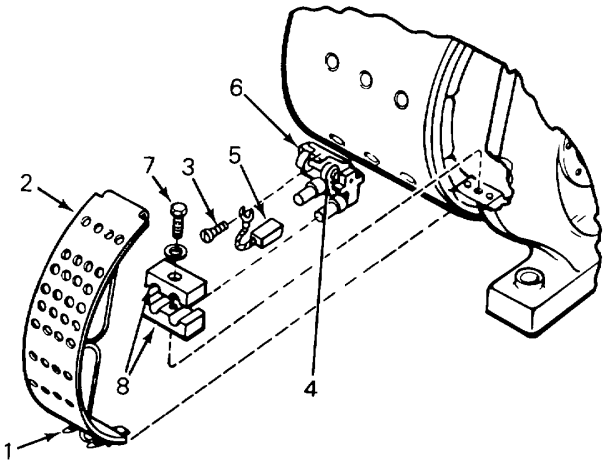

INSTALLATION

9. Position lower half of clamp (8), brush holder (6), and upperhalf of clamp on traction motor.

10. Install bolt (7) finger tight. Connect electrical lead.

11. Raise spring (4) and install brushes (5). Release spring. Install screw (3).

12. Keep the underside of the brush holder carbon box within a minimum of 1/16 inch (1.6 mm) of the commutator and tighten bolt (7).

4-46 TRACTION MOTOR BRUSHES AND BRUSH HOLDERS (cont)

ADJUSTMENT

13. Connect small spring scale to the spring directly over the brush and pull straight up inline with the brush travel until the spring is just clear of the brush. The pressure should be between 7.9 and 8.5 pounds (3.6 and 3.7 kg). Adjust spring pressure as follows:

a. For coarse adjustment, each spring is adjusted separately as follows:

(1) Remove cotter pin (9) from ratchet (10) of spring (11) to be adjusted.

(2) Turn ratchet toward brush holder body (12) (as viewed from top) to increase spring pressure, or turn away from brush holder body to reduce the pressure.

(3) Replace cotter pin (9) through newly alined holes in ratchet.

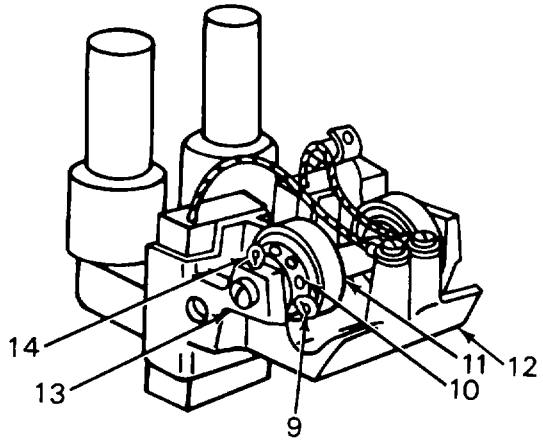

b. For fine adjustment, springs are adjusted simultaneously as follows: (1) Apply screwdriver to slot in support pin (13) and hold.

(2) Remove single cotter pin (14), located in one end of brush holder body (12), through the support pin (13).

(3) Turn screwdriver through a small angle (about 4-1/2 degrees) away from the brush holder body (12), as viewed from top, until cotter pin (14) can be inserted on the end opposite the one from which it was removed.

(4) Insert cotter pin (14) on opposite end of support pin (13).

14. Position two covers (2) and connect latch (1).

Section VI. PREPARATION FOR STORAGE OR SHIPMENT

4-47. STORAGE INSTRUCTIONS

These instructions provide the minimum requirements for interim storage of the locomotive.

a. Storage of Locomotives.

(1) Locomotives authorized under the provisions DOD 4140.50-R may be placed in storage when there is no immediate requirement for the equipment, but must be retained for contingency or other valid reasons.

(2) Consideration will be given to retaining the locomotive in active service through a rotation program with assigned locomotives in operation at the installation to which the unit is assigned.

(3) The high acquisition cost, the long procurement cycle, the transportation cost incurred in the movement or reassignment, and the time frame required to secure a locomotive or replacement are factors to be considered in determining whether a locomotive should be retained in storage or declared excess.

(4) Locomotives placed in storage shall be processed in accordance with the applicable regulations of the DOD component owning the locomotive.

(5) The Department of the Army Technical Bulletin (TB) 740-97-5, Preservation of Railroad Equipment for Storage, may be used instead of service regulations.

b. Storage Locations. The following factors shall be weighed in determining storage locations for locomotives:

(1) Strategic location in relation to mobilization or emergency requirements

(2) Availability of rail trackage

(3) Resource availability for dynamic dehumidification (cocooning) and enclosed storage facilities

(4) Climatic conditions (5) Access to major trunk lines

c. Short Term Storage at User Installations.

(1) Administrative storage, where the user installation places the locomotive in a limited care and preservation status in accordance with applicable technical manuals for short periods of time, is authorized.

(2) The allowable time that a locomotive may remain in administrative storage will vary with the storage environment.

4-47. STORAGE INSTRUCTIONS (cont)

(3) Locomotives placed in this type storage will be capable of being restored to full mission capability within 30 days.

(4) Prior to placing the locomotive in storage, the next scheduled preventive maintenance shall be performed and deficiencies shall be corrected.

(5) Regularly scheduled preventive maintenance services shall be suspended when the unit is placed in storage. Locomotives removed from storage will be restored to normal operating condition according to applicable technical manuals and tested to determine their operational capability.

d. Long-Term Storage.

(1) Long-term (in excess of 5 years) storage shall be restricted to locomotives that cannot be leased or acquired in time to meet contingency requirements.

(2) Dynamic dehumidification (cocooning) should be considered when it is anticipated that the locomotives may be retained in storage in excess of 5 years.

(3) When economically and operationally feasible, locomotives should be stored in areas with climate conditions conducive to preservation without dehumidification. Such storage will facilitate the rotation in usage of the locomotives in long-term storage and make it possible to place locomotives in service expeditiously in emergencies.

e. Storage Preparation.

(1) Cooling System. Check the cooling system for amount of coolant. If low, add premixed solution of 50 percent water and 50 percent ethylene glycol antifreeze (item 1, app E) to bring existing coolant to the prescribed operating level. Attach a warning tag to the filler neck with the following information:**COOLING SYSTEM FILLED WITH WATER AND ANTIFREEZE (ETHYLENE GLYCOL) IN EQUAL PARTS BY VOLUME - DO NOT DRAIN.**

(2) Lubrication Systems. Check the lubrication systems for level of lubricant. If level of lubricant is low, add oil of the type and grade required by lubrication order LO 55-2210-224-12.

(3) Fuel System. Drain the entire fuel system.

(4) Gear Housings. Check the lubricant level in the gear housings. If low, add lubricant of the type and grade specified by LO 55-2210-224-12 to attain proper operating level.

(5) Batteries. Set main battery switch to the OPEN position. Disconnect the cables from the batteries and secure to the battery support with tape (item 27, app E).

4-47. STORAGE INSTRUCTIONS (cont)

(6) Air Tank and Lines. Drain moisture from tank and lines and close drain cocks and valves.

(7) Engine Openings. Seal openings in exhaust pipes with tape (item 27, app E).

4-48. SHIPPING INSTRUCTIONS

a. Loading Procedures. The 80-ton locomotive will be shipped on a modified 100-ton flatcar.

WARNING

- **Care shall be taken when disengaging chain binders from the portable ramp sections. The binder may snap open and cause injury or death to personnel.**

- **Care shall be taken after chains are removed from portable ramp. Sections may shift and fall, causing injury or death to personnel.**

NOTE

Loading shall be done on level, straight track. Before starting loading procedures, be sure transporter flatcar' is braced and brake is applied to prevent movement.

(1) Disengage chain binders and remove chains holding portable ramp to flatcar. Chains and chain binders will remain with flatcar.

(2) Use a suitable lifting device and lift ramp section from flatcar.

(3) Remove hardware securing ramp sections together and separate sections. Retain hardware.

NOTE

A-end of flat car has stabilizing jacks under the deck.

(4) Select largest section of ramp, use eight 1 X 4-inch (25.4 X 101.6 mm) bolts, and bolt ramp to A-end of flatcar. Make sure that rails on ramp match up with rails on flatcar.

(5) Select the next section of ramp and bolt to first section. Continue this procedure until all sections are bolted together and create a gradual slope from the bed of flatcar to the track rails. The ramp will be approximately 50 feet (15 m) long when assembled. Check that bolt holes are secured and that 5/8 X 2-1/2-inch (15.9 x 63.5 mm) bolts are used to secure ramp.

4-48. SHIPPING INSTRUCTIONS (cont)

(6) Remove U-bolts that hold stabilizing jacks against bottom of flatcar bed. Lower from stowed position to vertical position. Retain U-bolts and hardware.

(7) Use stabilizing jacks and stabilize flatcar.

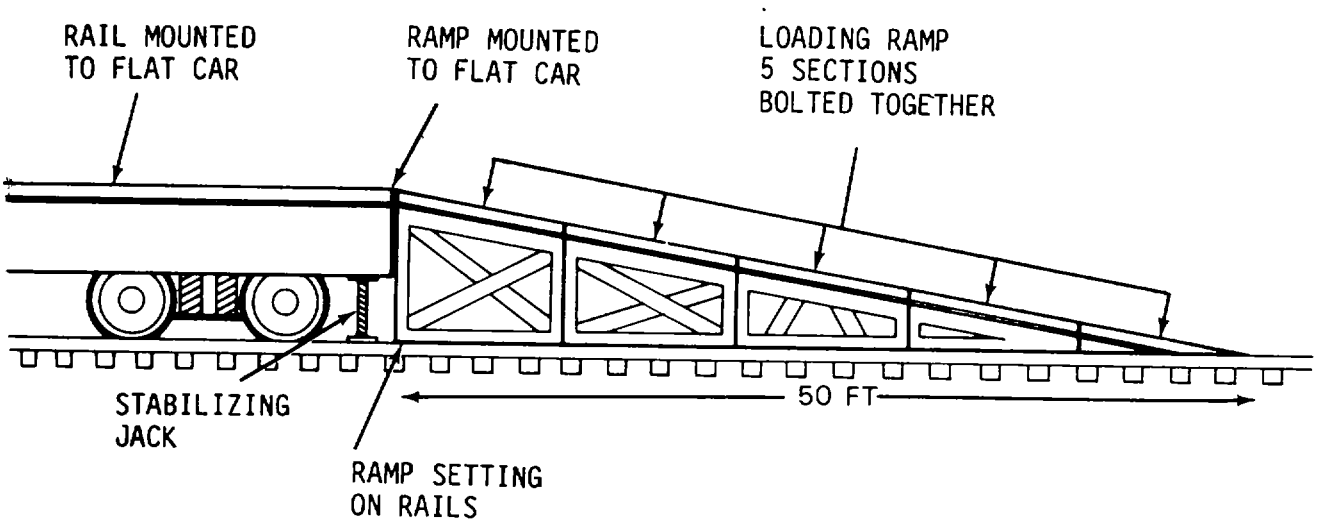

NOTE

The preferred method of loading a locomotive on-to a flatcar is under its own power.

(8) Load locomotive on flatcar as follows:

(a) Operational locomotive.

1 Slowly move operational locomotive up ramp and onto flatcar.
2 Position locomotive on flatcar and lock locomotive coupler to coupler mounted on flatcar.

(b) Dead locomotive.

1 Position a flatcar as a buffer between dead locomotive and locomotive providing power.

WARNING

Extreme caution shall be used when using a flatcar as a buffer to move a dead locomotive. Couplers may slip apart, causing death or injury to personnel and damage to equipment.

2 Slowly push dead locomotive up ramp and onto flatcar.

3 Position locomotive on flatcar and lock locomotive coupler to coupler mounted on flatcar.

4-48. SHIPPING INSTRUCTIONS (cont)

NOTE:

WELD BRACKET TO FLOOR OF FLATCAR DURING LOADING PROCEDURE. CUT THE SAME WELDS DURING UNLOADING PROCEDURES.

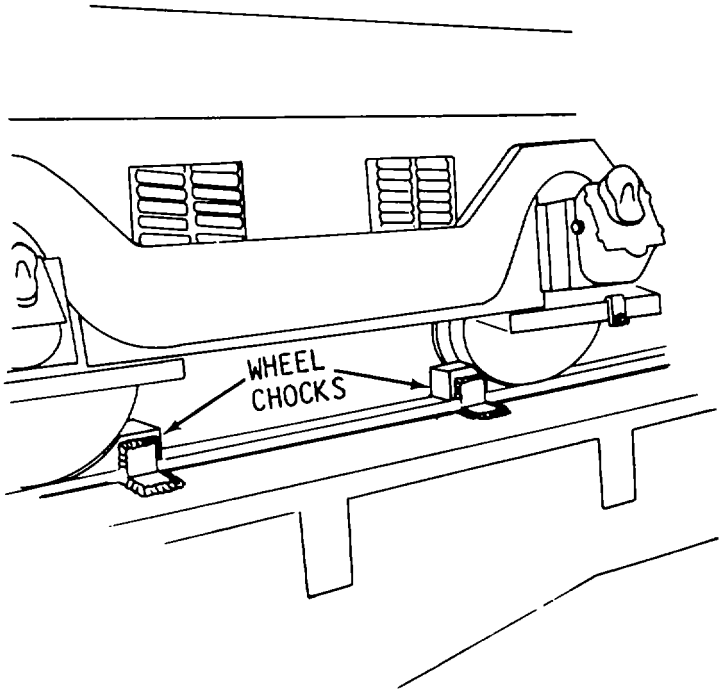

(9) Install 1/4-inch (6.4 mm) cable (component of flatcar) to coupler assembly to prevent coupler from opening during transit.

(10) There are eight wheel chocks provided with the flatcar. Place one wheel chock behind the front wheels and one in front of the rear wheels on each truck of the locomotive.

(11) Weld angle iron bracket of wheel chocks to bed of flatcar. Weld a continuous 1/2-inch (12.7 mm) fillet on each edge of angle bracket touching bed of flatcar.

(12) Place stabilizing jacks provided with flatcar directly under each jack pad on locomotive deck.

4-48. SHIPPING INSTRUCTIONS (cont)

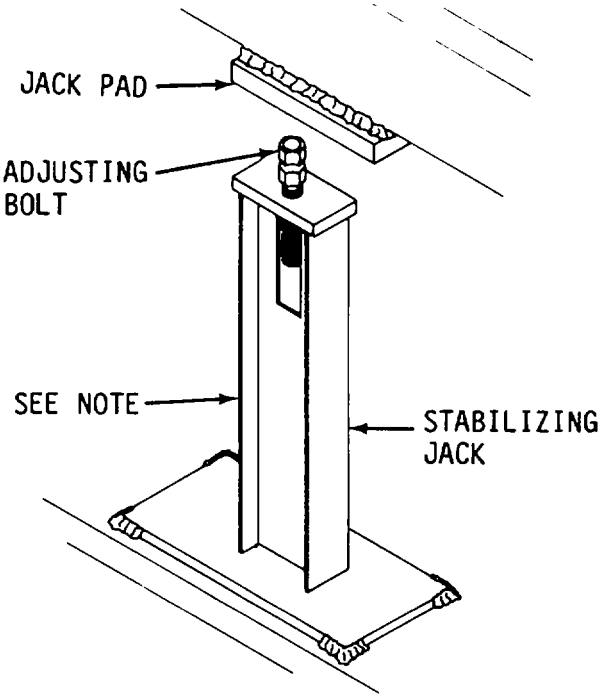

NOTE:

LOADING PROCEDURE

WELD BASE OF JACK TO BED OF FLATCAR WITH A 3/4-INCH FILLET WELD 2 INCHES LONG ON EACH CORNER OF BASE.

UNLOADING PROCEDURE

CUT THE SAME WELDS IN LOADING PROCEDURE.

(13) Weld base of jacks to bed of flatcar with a 3/4-inch (19.1 mm) fillet weld 2 inches (50.8 mm) long on each corner of base.

(14) Tighten adjusting bolts of stabilizing jacks against jack pads on locomotive deck until equally tight after locomotive is secured.

(15) Attach 3/4-inch (19.1 mm) chains, provided with flatcar, to tiedowns on deck of locomotive. Use 3/4 x 4-inch (19.1 X 101.6 mm) bolts, lockwashers, and nuts.

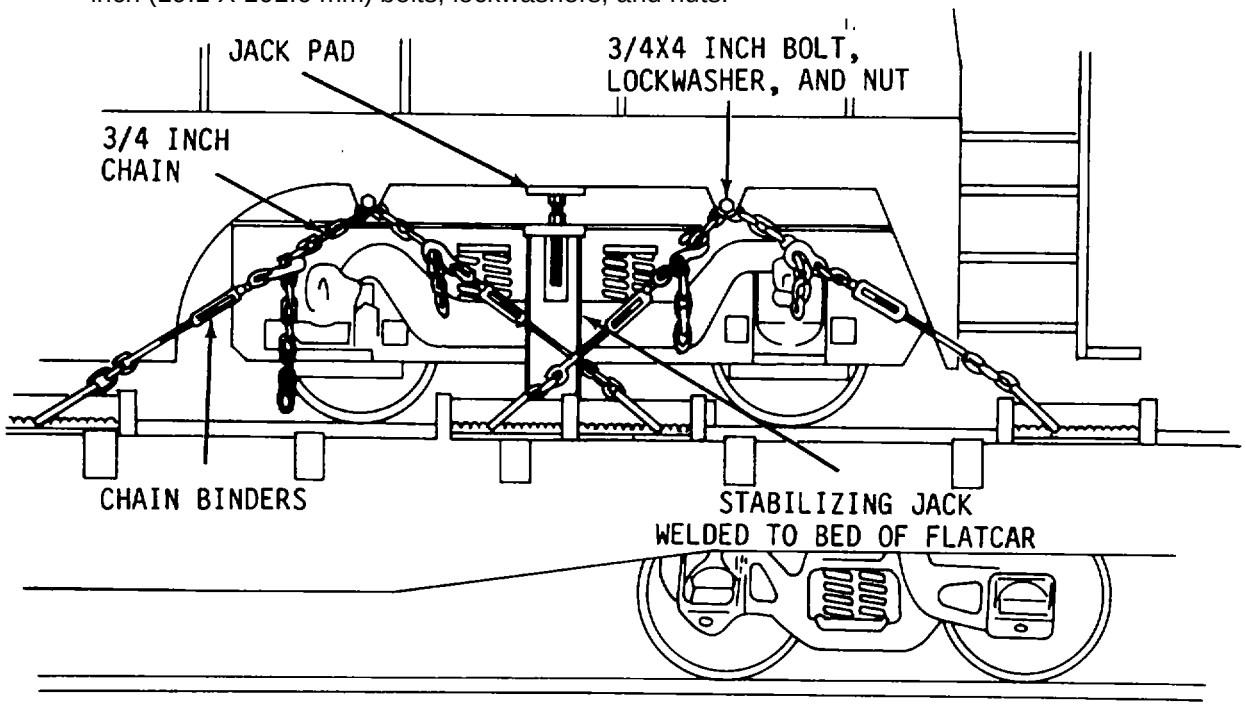

4-48. SHIPPING INSTRUCTIONS (cont)

(16) Attach chains to chain binders that are mounted to sides of the flatcar, making sure each chain is pulling in the opposite direction from the other. Chains should be attached to the chain binders so that they are as tight as possible before binders are locked down. Lock down each chain binder and recheck each chain for proper tension. Tighten chain if necessary.

(17) Safety-wire handles of chain binders to prevent accidental opening during transit.

(18) Raise stabilizing jacks mounted under flatcar to stowage position and secure with U-bolts and hardware retained in step (6) above.

(19) Disassemble loading ramp and retain hardware with flatcar.

(20) Use hardware retained in step (3) above and bolt portable ramp sections together in two equal stacks. Portions of ramp may need to be turned over to allow proper stacking.

(21) Use a suitable lifting device and place one stack on each end of the flatcar.

(22) Use two strands of 3/4-inch (19.1mm) chain for each stack and chain binders and secure ramp sections to the flatcar.

(23) Safety wire handles of chain binders.

(24) Disconnect batteries and mask exhaust stack ports on locomotive.

(25) Make a final inspection of flatcar and locomotive. Make sure chains, chain binders, stabilizing jacks, and ramp sections are secure on flatcar. Place unused chains and hardware used with flatcar in stowage boxes on flatcar.

b. Unloading Procedures.

WARNING

- **Care shall be taken when disengaging chain binders from the portable ramp. The chain binder may snap open and cause injury or death to personnel.**

- **Care shall be taken after chains are removed from portable ramp. Sections may shift and fall, causing injury or death to personnel.**

NOTE

Unloading shall be done on level straight track. Before starting unloading procedures, be sure transporter flatcar is braced and brake is applied to prevent movement.

(1) Remove safety wire, release chain binders, and remove chains securing portable ramps. Chains and chain binders must remain with the flatcar.

4-48. SHIPPING INSTRUCTIONS (cont)

(2) Use a suitable lifting device and lift ramp sections from flatcar.

(3) Remove hardware securing sections together. Retain hardware.

NOTE

A-end of flatcar has stabilizing jacks under the deck.

(4) Select largest section of ramp, use eight 1 X 4-inch (25.4 X 101.6 mm) bolts, and bolt ramp to A-end of flatcar. Make sure that rails on ramp section aline with rails on flatcar.

(5) Select the next section of ramp and secure to first section. Continue this procedure until all sections are secured together and create a gradual slope from the bed of the flatcar to the track rails. The ramp will be approximately 50 feet (15.2 m) long. Check that bolt holes are secured and that 5/8 X 2-1/2-inch (15.9 x 63.5 mm) bolts are used to secure ramp.

WARNING

Care shall be taken when disengaging chain binders. The chain binders may snap open, causing death or injury to personnel.

(6) Remove safety wire securing chain binder handles. Raise handle to relieve tension on chains mounted between binders and tiedowns of the locomotive. Remove chains. Chains must remain with the flatcar.

(7) Turn adjusting bolt counterclockwise on stabilizer jacks until bolt is disengaged from jack pads on locomotive deck.

(8) Use a cutting torch and cut welds securing base of stabilizer jacks to bed of the flatcar. Remove jacks. Jack stands are components of the flatcar and must remain with the car.

(9) Use a cutting torch and cut welds securing angle bracket of wheel chocks to bed of flatcar. Retain wheel chocks.

(10) Remove U-bolts holding bed stabilizing jacks against bottom of flatcar. Lower from stowed position to vertical position. Retain U-bolts and hardware.

(11) Use stabilizing jacks and stabilize bed of flatcar.

(12) Before removing locomotive from flatcar, check and make sure that devices for securing the locomotive to the car have been removed and that objects that may damage the locomotive or the car are also removed.

4-48. SHIPPING INSTRUCTIONS (cont)

NOTE
Use either step (13) or (14) for unloading locomotive from flatcar.

(13) Unload locomotive under its own power, by the following:

(a) Remove tape from exhaust stack.

(b) Connect batteries.

(c) Check fluid levels (oil, fuel, coolant, compressor oil).

(d) Check belts on compressor for proper tightness.

(e) Visually inspect main generator for objects that may damage generator.

(f) Set battery switch to CLOSE and check electrical system.

(g) Start locomotive and observe that air system is working properly.

(h) Remove cable on front coupler of locomotive and knuckle of coupler mounted to flatcar. Release coupler from knuckle.

(i) Release emergency hand brake.

(j) Apply air to brake system and check brakes for proper operation. Do not attempt to unload locomotive if brakes are not functioning properly.

(k) Apply 15 to 20 psi (103 to 138 kPa) to independent brake.

(l) Place throttle and reverser in appropriate positions and move locomotive slowly to ramp. Disengage throttle when locomotive begins to move down ramp.

(14) Unload locomotive using another locomotive by the following:

(a) Remove cable on front coupler of locomotive and knuckle of coupler mounted to flatcar. Release coupler from knuckle.

(b) Release emergency handbrake on locomotive.

NOTE

Locomotive providing power should have a flatcar as a buffer between it and the locomotive to be pulled off transport car. This will enable the pulling locomotive to remain on a level grade.

(c) Push the flatcar up the ramp. Pull pin on coupler knuckle of locomotive and remove knuckle. When coupler of flatcar meets coupler of locomotive, connect them together securely with a chain. (Couplers cannot be closed because of angle of ramp.) Connect airhose and open cutout cock.

4-48. SHIPPING INSTRUCTIONS (**cont**)

WARNING

Extreme caution shall be used when unloading locomotive. Death or injury to personnel or damage to equipment could occur.

(d) Pull locomotive down ramp, using brake system of locomotive providing power to slow the speed of descent.

(15) Raise stabilizing jacks mounted under flatcar to stowage position and secure with U-bolts and hardware retained in step (10) above.

(16) Disassemble loading ramp and retain hardware with flatcar.

(17) Use hardware retained in step (3) above and bolt portable ramp sections together in two equal stacks.

WARNING

When stacked, portable ramp may shift and fall and cause injury or death to personnel.

(18) Use a suitable lifting device and place one stack on each end of the flatcar.

(19) Use two strands of 3/4-inch (19.1 mm) chain for each stack and chain binders. Secure ramp to flatcar.

(20) Place chains, chain binders, wheel chocks, and hardware in stowage boxes on flatcar.

(21) Lay locomotive stabilizing jacks lengthwise on bed of flatcar and secure jacks.

(22) Flatcar is ready for transport.

4-49. MARKING FOR SHIPMENT

A marking panel (1/4 inch [6.4 mm] plywood, 1/2 inch [12.7 mm] lumber, or 1/8 inch [3.2 mm] hardwood) shall be affixed to the locomotives. The panel shall include the following information:

NOT PROCESSED FOR STORAGE

SERIAL/REGISTRATION NUMBER

FROM (Indicate name and address of consignor)

TO (Indicate name and address of consignee)

APPENDIX A

REFERENCES

A-1. SCOPE

This appendix lists all forms, field manuals, technical bulletins, technical manuals, and miscellaneous publications referenced in this manual.

A-2. ADMINISTRATIVE PUBLICATION

a. Pamphlets.

DA PAM 738-750	The Army Maintenance Management System (TAMMS)

b. Forms.

DA Form 2028	Recommended Changes to Publications and Blank Forms
DA Form 2028-2	Recommended Changes to Equipment Technical Publications
DA Form 2404	Equipment Inspection and Maintenance Worksheet
DA Form 2407	Maintenance Request
DA Form 2408	Equipment Log Assembly
DA Form 2410	Component Removal and Repair/Overhaul Record
DD Form 862	Daily Inspection Worksheet for Diesel-Electric Locomotive and Locomotive Cranes
FRA Form 6180-49A	Locomotive Inspection and Repair Record
SF 364	Report of Discrepancy (ROD)
SF 368	Quality Deficiency Report

A-3. TECHNICAL PUBLICATIONS

a. Bulletins.

TB 55-2200-207-15/1	Inspection and Maintenance Checklist for Diesel-Electric Locomotives
TB 740-97-5	Preservation of Railroad Equipment for Storage

A-3. (**cont**)

b. Manuals.

DOD 4140.50-R	Management and Standards of DOD Locomotves
FM 9-207	Operation and Maintenance of Ordinance Material in Cold Weather
FM 21-11	First Aid for Soldiers
FM 55-20	Army Rail Transport Units and Operation
TM 5-2815-233-24&P	Unit, Intermediate Direct Support, and Intermediate General Support Maintenance Manual and Repair Parts and Special Tools List, Diesel Engine, 670 HP, Cummins Model NTA 855-L4.
TM 9-237	Welding Theory and Application
TM 9-6140-200-14	Operator, Organizational, Direct Support, and General Support Maintenance Manual for Lead-Acid Storage Batteries
TM 43-0139	Painting Instructions for Field Use
TM 55-2210-224-24P	Unit, Intermediate Direct Support, and Intermediate General Support Maintenance Repair Parts and Special Tools Lists, Locomotive, Diesel-Electric, 56-1/2-inch gage, 80-Ton, 670 HP, 0-4-4-0 Wheel, Model B-B-160/160-4GE747-A1 NSN 2210-01-159-2980
TM 750-244-3	Procedures for Destruction of Equipment to Prevent Enemy Use

c. Lubrication Order.

LO 55-2210-224-12	Locomotive, Diesel-electric, 56-1/2-inch gage, 80-Ton, 670 HP, 0-4-4-0 Wheel, Model B-B-160/160-4GE747-A1 NSN 2210-01-159-2980

APPENDIX B

MAINTENANCE ALLOCATION CHART (MAC)

Section I. INTRODUCTION

B-1. GENERAL

a. This section provides a general explanation of all maintenance and repair functions authorized at various maintenance categories.

b. The Maintenance Allocation Chart (MAC) in section II designates overall authority and responsibility for the performance of maintenance functions on the identified end item or component. The application of the maintenance functions to the end item or component will be consistent with the capacities and capabilities of the designated maintenance categories.

c. Section III lists the special tools and test equipment (both special tools and common tool sets) required for each maintenance function as referenced from section II.

d. Section IV contains supplemental instructions and explanatory notes for a particular maintenance function.

B-2. MAINTENANCE FUNCTIONS

Maintenance functions will be limited to and defined as follows:

a. Inspect. To determine serviceability of an item by comparing its physical, mechanical, and/or electrical characteristics with established standards through examination (e.g., by sight, sound, or feel).

b. Test. To verify serviceability by measuring the mechanical, pneumatic, hydraulic, or electrical characteristics of an item and comparing those characteristics with prescribed standards.

c. Service. Operations required periodically to keep an item in proper operating condition, i.e., to clean (includes decontamination, when required), to preserve, to drain, to paint, or to replenish fuel, lubricants, chemical fluids, or gases.

d. Adjust. To maintain or regulate, within prescribed limits, by bringing into proper or exact position, or by setting the operating characteristics to specified parameters.

e. Aline. To adjust specified variable elements of an item to bring about optimum or desired performance.

B-2. MAINTENANCE FUNCTIONS (cont)

f. Calibrate. To determine and cause corrections or adjustments to be made on instruments or test, measuring, and diagnostic equipment used in precise measurement. Consists of comparisons of two instruments, one of which is a certified standard of known accuracy, to detect and adjust any discrepancy in the accuracy of the instrument being compared.

g. Remove/Install. To remove and install the same item when required to perform service or other maintenance functions. Install may be the act of emplacing, seating, or fixing into position a spare, repair part, or module, (component or assembly) in a manner to allow the proper functioning of equipment or a system.

h. Replace. To remove an unserviceable item and install a serviceable counterpart in its place. Replace is authorized by the MAC and is shown as the 3d position code of the SMR code.

i. Repair. The application of maintenance services, including fault location/troubleshooting, removal/installation, and disassembly/assembly procedures, and maintenance actions to identify troubles and restore serviceability to an item by correcting specific damage, fault, malfunction, or failure in a part, subassembly, module (component or assembly), end item, or system.

j. Overhaul. That maintenance effort (service/action) prescribed to restore an item to a completely serviceable/operational condition as required by maintenance standards in appropriate technical publications (i.e., DMWR). Overhaul is normally the highest degree of maintenance performed by the Army. Overhaul does not normally return an item to like-new condition.

k. Rebuild. Consists of those services/actions necessary for the restoration of unserviceable equipment to a like-new condition in accordance with original manufacturing standards. Rebuild is the highest degree of materiel maintenance applied to Army equipment. The rebuild operation includes the act of returning to zero those age measurements (hours/miles, etc.) considered in classifying Army equipment/components.

B-3. EXPLANATION OF COLUMNS IN THE MAC, SECTION II

a. Column 1 - Group Number. Column 1 lists functional group code numbers, the purpose of which is to identify maintenance significant components, assemblies, subassemblies, and modules with the next higher assembly. End item group number shall be 00.

b. Column - 2 Component/Assembly. Column 2 lists the names of components, assemblies, subassemblies, and modules for which maintenance is authorized.

c. Column - 3 Maintenance Functions. Column 3 lists the functions to be performed on the item listed in column 2. (For detailed explanation of these functions, see para B-2.)

B-3. EXPLANATION OF COLUMNS IN THE MAC, SECTION II (cont)

d. Column 4 - Maintenance Category. Column 4 specifies, by the listing of a work/time figure in the appropriate subcolumn(s), the category of maintenance authorized to perform the function listed in column 3. This figure represents the active time required to perform that maintenance function at the indicated category of maintenance. If the number or complexity of the tasks within the listed maintenance function varies at different maintenance categories, appropriate work/time figures will be shown for each category. The work/time figure represents the average time required to restore an item (assembly, subassembly, component, module, end item, or system) to a serviceable condition under typical field operating conditions. This time includes preparation time (including any necessary disassembly/ assembly time), troubleshooting/fault location time, and quality assurance/quality control time in addition to the time required to perform the specific tasks identified for the maintenance functions authorized in the maintenance allocation chart. The symbol designations for various maintenance categories are as follows:

Code	Explanation
C	Operator or Crew
O	Unit Maintenance
F	Intermediate Direct Support Maintenance
H	Intermediate General Support Maintenance
D	Depot Maintenance

e. Column 5 - Tools and Equipment. Column 5 specifies, by code, those common tool sets (not individual tools) and special tools, TMDE, and support equipment required to perform the designated function.

f. Column 6 - Remarks. This column shall, when applicable, contain a letter code in alphabetic order which shall be keyed to the remarks contained in section IV.

B-4. EXPLANATION OF COLUMNS IN TOOL AND TEST EQUIPMENT REQUIREMENTS, SECTION III

a. Column 1, Reference Code. The tool and test equipment reference code correlates with a code used in MAC, Section II, Column 5.

b. Column 2, Maintenance Category. The lowest category of maintenance authorized to use the tool or test equipment.

c. Column 3, Nomenclature. Name or identification of the tool or test equipment.

d. Column 4, National Stock Number. The National Stock Number of the tool or test equipment.

e. Column 5, Tool Number. The manufacturers part number.

B-5. EXPLANATION OF COLUMNS IN REMARKS, SECTION IV

a. Column 1, Reference Code. The code recorded in column 6, Section II.

b. Column 2, Remarks. This column lists information pertinent to the maintenance function being performed as indicated in the MAC, Section II.

Section II. MAINTENANCE ALLOCATION CHART

(1) Group Number	(2) Component/ Assembly	(3) Maintenance Function	(4) Maintenance Category C	O	F	H	D	(5) Tools and Equipment	(6) Remarks
00	LOCOMOTIVE 80-TON								
01	BODY GROUP								
0101	Door, Engine	Inspect	0.1	0.5					A-A
		Service		0.1					
	Hood	Replace		4.0				1	
		Repair		10.0				1,3,4	
0102	Handrail, Upright,	Inspect	0.1	0.5					A-A
	Cutter Lever,	Replace		4.0				1	
	and Step	Repair		10.0				1,3,4	I-I
0103	Hood Assembly,	Inspect		0.5					A-A
	Engine	Replace			8.0			2	R-A
		Repair			20.0			2,3,4	I-I
02	CAB GROUP								
0201	Seat and Cushion	Inspect	0.1	0.2					A-A
		Replace		2.0				1	
		Repair		4.0				1	
0202	Armrest	Inspect		0.1					A-A
		Replace		1.0				1	
		Repair		2.0				1	
0203	Wiper Motor, Blade, and Arm, Windshield								
	Wiper Motor	Inspect		0.2					A-A
		Replace		1.6				1	
		Repair		8.0				1	
	Blade and Arm	Inspect	0.1	0.1					A-A
		Replace		0.2				1	
0204	Glass and Sash,	Inspect	0.1	0.2					A-A
	Window	Replace		12.0				1	
		Repair		16.0				1	
0205	Door and Lock, Cab	Inspect	0.1	0.2					A-A
		Service		0.1					
		Replace		4.0				1	
		Repair		8.0				1,3,4	

Section II. MAINTENANCE ALLOCATION CHART (continued)

(1) Group Number	(2) Component/ Assembly	(3) Maintenance Function	(4) Maintenance Category C	O	F	H	D	(5) Tools and Equipment	(6) Remarks
0206	Door, Side Compartment	Inspect	0.1	0.5					A-A
		Service		0.1					
		Replace		2.0				1	
		Repair		5.0				1,3,4	
0207	Door, Electrical Equipment Cabinet	Inspect		0.2					A-A
		Replace		4.0				1	
		Repair		8.0				1,3,4	
03	BELL GROUP								
0301	Bell Assembly, Safety Warning	Inspect	0.1	0.1					A-B
		Service		0.2					
		Replace		1.5				1	
		Repair		3.0				1	
0302	Valve, Safety Warning Bell Operating	Inspect			0.1				A-A
		Replace			1.0			2	
0303	Bell, Multiple-unit Engine System Warning	Inspect		0.1					A-B
		Test		0.5					
		Replace		1.0				1	
0304	Buzzer, Engine System Warning	Inspect		0.1					A-B
		Test		0.5					
		Replace		1.0				1	
04	HORN GROUP								
0401	Horn Assembly	Inspect	0.1	0.1					A-B
		Replace		1.5				1	
		Repair		4.0				1	
0402	Valve, Horn Assembly Operating	Inspect			0.1				A-A
		Replace			1.0			2	
05	HEATER GROUP, CAB								
0501	Heater Assembly, Cab	Inspect		0.2					A-A
		Test		0.8				1	
		Replace		4.0				1	
		Repair		8.0				1	
		Overhaul					16.0		
050101	Brushes, Carbon	Inspect		0.2					A-A
		Replace		1.0				1	

Section II. MAINTENANCE ALLOCATION CHART (continued)

(1) Group Number	(2) Component/ Assembly	(3) Maintenance Function	(4) Maintenance Category C	O	F	H	D	(5) Tools and Equipment	(6) Remarks
050102	Holders, Brush	Inspect		0.2					A-A
		Replace		1.0				1	
050103	Resistor	Test		0.2					A-F
		Replace		0.7				1	
0502	Lines, Hoses, and	Inspect		0.1					A-A
	Fittings, Heater	Replace		1.5				1	
		Repair		2.0				1	
06	GAGES AND INSTRUMENT GROUP								
0601	Air Gages, Duplex	Inspect	0.1	0.1					A-A
		Test			2.0			2,5	A-C
		Replace			1.0			2	
		Repair			2.0			2	
0602	Gages, Engine	Inspect	0.1	0.1					A-A
	Oil Pressure	Test			1.0			2,5	A-C
		Replace			2.0			2	
0603	Gages, Engine	Inspect	0.1	0.1					A-A
	Temperature	Test			1.0			2	A-C
		Replace			2.0			2	
0604	Gages, Load Meter	Inspect	0.1	0.1					A-A
		Test			1.0			2	A-C
		Replace			2.0			2	
0605	Gage, Battery	Inspect	0.1	0.1					A-A
	Voltmeter	Test			1.0			2	A-C
		Replace			2.0			2	
0606	Gage, Service Meter	Inspect	0.1	0.1					A-A
		Test			1.0			2	A-C
		Replace			2.0			2	
0607	Gage, Air Compressor	Inspect	0.1	0.1					A-A
	Oil Pressure	Test			1.0			2	A-C
		Replace			1.0			2	
07	SANDER GROUP								
0701	Controller, Sand	Inspect	0.2	0.1					A-A
		Replace		4.0				1	
		Repair		6.0				1	

Section II. MAINTENANCE ALLOCATION CHART (continued)

(1) Group Number	(2) Component/ Assembly	(3) Maintenance Function	(4) Maintenance Category C	O	F	H	D	(5) Tools and Equipment	(6) Remarks
0702	Valve, Sander Control	Inspect		0.1					A-A
		Test		0.8					
		Replace		4.0				1	
		Repair			6.0			2	
0703	Hose Assembly, Sander	Inspect		0.1					A-A
		Replace		4.0				1	
0704	Sandbox	Inspect	0.1	0.1					A-A
		Service		0.2				1	
0705	Switch, Emergency Sand Pressure	Inspect		0.1					A-A
		Replace			2.0			2	
08	ELECTRICAL ACCESSORIES GROUP								
0801	Switches, Circuit Breakers, and Indicating Lights	Inspect		0.1					A-A
		Test		0.5				1	
		Replace		1.5				1	
0802	Batteries and Connections, Storage	Inspect		0.1					A-A,A-D
		Service		0.6					
		Test		1.0				9	A-E
		Replace		4.0				1	
		Repair		8.0				1	
0803	Battery Compartment	Inspect		0.1					
		Repair		3.0					
0804	Jumper, Multiple-Unit Control	Inspect		0.1					A-A
		Test		0.4					
		Replace		0.5					1
0805	Receptacle, Multiple-Unit	Inspect		0.1					A-A
		Test			0.5			2	
		Replace			1.0			2	
		Repair			2.0			2	
0806	Receptacle, Engine Heater	Inspect		0.1					A-A
		Test			0.5			2	
		Replace			1.0			2	
		Repair			2.0			2	
0807	Timer	Inspect		0.1					A-A
		Test			1.0				
		Replace			1.0			2	

Section II. MAINTENANCE ALLOCATION CHART (continued)

(1) Group Number	(2) Component/ Assembly	(3) Maintenance Function	(4) Maintenance Category C	O	F	H	D	(5) Tools and Equipment	(6) Remarks
09	LIGHT GROUP								
0901	Headlamp	Inspect	0.1	0.1					A-A
		Test		0.5					
		Replace		0.5				1	
0902	Lights, Step, Cowling, Gage, Cab, and Electrical Equipment Cabinet	Inspect	0.1						A-A
		Test		0.3					
		Replace		0.5					
0903	Wiring	Inspect		0.1					
		Test		0.2					A-A
		Repair		0.4				1	
10	CONTROLS, ELECTRICAL GROUP								
1001	Contactor, Field Shunt	Inspect		1.0					A-A
		Test			2.0			2	
		Replace			4.0			2	
		Repair			8.0			2	
		Adjust			1.0				
1002	Contactor, Cranking	Inspect		1.0					A-A
		Test			2.0			2	
		Replace			4.0			2	
		Repair			16.0			2	
		Adjust			1.0				
1003	Contactor, Power	Inspect		1.0					A-A
		Test			2.0			2	
		Replace			4.0			2	
		Repair			16.0			2	
		Adjust			1.0				
1004	Relay, Engine Temperature Warning, Motor Kill, Safety, and Field Shunt Transition	Inspect		1.0					A-A
		Test			1.0			2	
		Replace			2.0			2	
		Repair			8.0			2	
1005	Relay, Ground	Inspect		1.0					A-A
		Test			2.0			2	
		Replace			4.0			2	
		Repair			8.0			2	

Section II. MAINTENANCE ALLOCATION CHART (continued)

(1) Group Number	(2) Component/ Assembly	(3) Maintenance Function	(4) Maintenance Category C	O	F	H	D	(5) Tools and Equipment	(6) Remarks
1006	Relay, Wheel Slip	Inspect		1.0					A-A
		Test			2.0			2	
		Replace			4.0			2	
		Repair			8.0			2	
1007	Reverser	Inspect		1.0					A-A
		Service		0.3					
		Test			2.0			2	
		Replace			8.0			2	
		Repair			16.0			2	
1008	Resistors and Shunt Devices	Inspect		1.0					A-A
		Test			4.0			2	
		Replace			8.0			2	
1009	Controller Mechanism	Inspect		0.2					A-A
		Test			1.0			2	
		Replace			5.0			2	
		Repair			10.0			2	
1010	Alternator, Speed-Sensing	Inspect		0.1					A-A
		Test			1.0			2	B-B
		Replace			2.0			2	
		Repair			4.0			2	
1011	Panel, Transition Relay	Inspect		0.2					A-A
		Test			0.5	2.0			B-B
		Replace			2.0			2	
		Repair				6.0		2	
11	BATTERY CHARGING ALTERNATOR GROUP								
1101	Belts, Battery Charging Alternator	Inspect	0.1	0.2					A-A
		Adjust		0.3					
		Replace		2.0				1	
12	MAIN GENERATOR GROUP								
1201	Generator, Main	Inspect		2.0					A-A
		Service		0.5					
		Test			4.0			2,6	O-B,C-C
		Replace			24.0			2	R-A
		Repair			32.0			2,7	
		Overhaul					40.0		
1202	Brushes, Carbon	Inspect		0.2				10	A-A
		Replace		8.0				1	

Section II. MAINTENANCE ALLOCATION CHART (continued)

(1) Group Number	(2) Component/ Assembly	(3) Maintenance Function	(4) Maintenance Category C	O	F	H	D	(5) Tools and Equipment	(6) Remarks
0203	Holders, Brush	Inspect		0.2					A-A
		Adjust			2.0			2, 11	
		Replace			16.0			2	
		Repair			32.0			2	
13	EXHAUST SYSTEM GROUP								
1301	Muffler and Exten-	Inspect		0.5					A-A
	sion Pipe, Exhaust	Replace		6.0				1	
14	FUEL SYSTEM GROUP								
1401	Lines and Fittings,	Inspect	0.2	0.2					A-A
	Fuel System	Replace		2.0				1	
1402	Switch, Emergency	Inspect		0.1					A-A
	Shutdown	Replace			1.0			2	
		Repair			2.0			2	
1403	Tank, Fuel	Inspect	0.1	0.1					A-A
		Service	0.5						
		Replace			15.0			2	R-A
		Repair			31.0			2	
1404	Gage, Fuel Level	Inspect		0.1					A-A
		Replace			1.0			2	
15	COOLING SYSTEM GROUP								
1501	Hoses and Clamps,	Inspect		0.2					A-A
	Cooling System	Replace		2.0				1	
1502	Belts, Cooling	Inspect	0.1	0.2					A-A
	Fan	Adjust		0.5					
		Replace		2.0				1	
1503	Fan Assembly,	Inspect		0.2					A-A
	Cooling	Replace			4.0			2	
	Overhaul						8.0		
1504	Clamps and Hoses,	Inspect		0.1					A-A
	Engine Block Heater	Replace		1.0				1	
1504	Radiator	Inspect	0.1	0.5					A-A
		Service		1.0					
		Test			3.0				W-B
		Replace			8.0			2	R-A
		Repair				16.0		2	

Section II. MAINTENANCE ALLOCATION CHART (continued)

(1) Group Number	(2) Component/ Assembly	(3) Maintenance Function	(4) Maintenance Category C	O	F	H	D	(5) Tools and Equipment	(6) Remarks
16	AIR COMPRESSOR GROUP								
1601	Belts, Air Compressor	Inspect	0.1						A-A
		Adjust		0.5					
		Replace		2.0				1	
1602	Air Compressor Assembly	Inspect	0.1	0.2					A-A,A-B
		Service		1.5					
		Test			0.5	8.0			X-B
		Replace			16.0			2	R-A
		Repair				18.0		2	
		Overhaul					60.0		
1603	Air Cleaner Intake, Air Compressor	Inspect		0.1					A-A
		Replace		1.0				1	
		Repair		2.0				1	
1604	Valves, Intake, Exhaust, and Unloader	Inspect			1.0				A-A
		Replace				2.0		2	
		Repair				4.0		2	
1605	Valve, Safety	Inspect			0.1				A-B
		Replace			1.0			2	
		Test			1.0			2	W-B
		Adjust			1.0	2.0	2.0	2	Y-Y
1606	Intercooler	Inspect			1.0				A-A
		Replace				2.0		2	
		Repair				6.0		2	P-B
1607	Cylinder Head, Compressor	Inspect			1.0				A-A
		Replace				4.0		2	
		Repair				6.0		2	
		Overhaul					8.0		
1608	Pistons, Connecting Rods, and Bearings	Inspect				1.0			A-A
		Test				2.0		2	T-B
		Replace				8.0		2	
		Repair				16.0		2	
1609	Crankshaft	Inspect				1.0			A-A
		Test				2.0		2	T-B
		Replace				8.0		2	
		Repair				16.0			

Section II. MAINTENANCE ALLOCATION CHART (continued)

(1) Group Number	(2) Component/ Assembly	(3) Maintenance Function	(4) Maintenance Category C	O	F	H	D	(5) Tools and Equipment	(6) Remarks
1610	Block, Crankcase, Compressor	Inspect			1.0				A-A
		Test			2.0				T-B
		Replace				4.0		2	
		Repair				8.0		2	
1611	Slinger, Oil	Inspect			1.0				A-A
		Replace				2.0		2	
		Repair				4.0		2	
17	GOVERNOR, AIR COMPRESSOR GROUP								
1701	Governor Assembly, Air Compressor	Inspect		0.2					A-A
		Test			0.5			2	A-F
		Replace			2.0			2	
		Repair			4.0			2	
18	ENGINE, DIESEL GROUP								
1801	Engine, Diesel	Inspect	0.1						
		Service		0.4					
		Replace				120.0			R-A
1802	Mounts, Motor	Inspect				0.5			A-A
		Replace				8.0		2	
19	AIR, BRAKE SYSTEM, AIR GROUP								
1901	Handbrake	Inspect	0.1	0.1					A-A
		Service		0.3					
		Test		0.2				1	
		Replace		2.0				1	
1902	Valve, Automatic Brake	Inspect	0.1	0.1					A-B
		Test			0.5				Y-Y
		Replace			3.0			2	
		Repair				8.0		2	
1903	Valve, Independent Brake	Inspect	0.1	0.1					A-B
		Test			0.5				Y-Y
		Replace			3.0			2	
		Repair				8.0		2	

Section II. MAINTENANCE ALLOCATION CHART (continued)

(1) Group Number	(2) Component/ Assembly	(3) Maintenance Function	(4) Maintenance Category C	O	F	H	D	(5) Tools and Equipment	(6) Remarks
1904	Valve, 6-NFR Distributing	Inspect		0.1					A-B
		Test			1.0				Y-Y
		Replace			2.0			2	
		Repair				8.0		2	
1905	Valve, 6-NFR Distributing Valve Safety	Inspect			0.1				A-B
		Test			1.0			2	W-B
		Replace			1.0			2	
		Adjust			1.0			2	Y-Y
1906	Valve, No. 8 Vent	Inspect		0.1					A-B
		Test			0.5			2	Y-Y
		Replace			1.0				
		Repair				3.0		2	
1907	Valve, A-1 Charg-ing Cutoff Pilot	Inspect		0.1					A-B
		Test			0.5				Y-Y
		Replace			1.0			2	
		Repair				3.0		2	
1908	Valve, H-5 Relay Air	Inspect		0.1					A-B
		Test			0.5				Y-Y
		Replace			1.0			2	
		Repair				3.0		2	
1909	Valve, Emergency Brake	Inspect		0.1					A-B
		Test			0.5				Y-Y
		Replace			1.0			2	
		Repair				3.0		2	
1910	Valve, Strainer and Check	Inspect		0.1					A-B
		Test			0.5				Y-Y
		Replace			1.0			2	
		Repair				2.0		2	
1911	Valve, No. 24 Double Check	Inspect		0.1					A-B
		Test			0.5				Y-Y
		Replace			1.0			2	
1912	Cutout Cock and Strainer	Inspect		0.1					A-B
		Test			0.5				Y-Y
		Replace			1.0			2	
		Repair				2.0		2	

Section II. MAINTENANCE ALLOCATION CHART (continued)

(1) Group Number	(2) Component/ Assembly	(3) Maintenance Function	(4) Maintenance Category C	O	F	H	D	(5) Tools and Equipment	(6) Remarks
1913	Valve, Check, Rubber Seated	Inspect		0.1					A-B
		Test			0.5				Y-Y
		Replace			1.0			2	
1914	Cutout Cock, Ball	Inspect		0.1					A-B
		Test			0.5				Y-Y
		Replace			1.0			2	
1915	Cylinder, Brake	Inspect	0.1	0.1					A-B
		Service		0.1					
		Test			1.0				Y-Y
		Replace			8.0			2	
		Repair			16.0			2	
		Adjust			2.0				
1916	Reservoir, Main Air	Inspect		0.5					A-A
		Service	0.3						
		Test			1.0				Y-Y,Y-Z
		Replace			12.0			2	R-A
1917	Valve, Main Air Reservoir Safety	Inspect			0.1				A-B
		Test			1.0				W-B
		Replace			1.0			2	
		Adjust			2.0			2	Y-Y
1918	Filter, Centri-fugal Air	Inspect			1.5				A-A
		Replace			3.0			2	
		Repair			8.0			2	
1919	Switches, Air Pressure Control	Inspect		0.2					A-A
		Replace			1.0			2	
1920	Hoses and Fittings, Trainline Air	Inspect	0.1	0.3					A-B
		Replace		4.0				1	
		Repair		0.5				1	
20	TRUCKS AND UNDER-FRAME GROUP								
2001	Assembly, Truck	Inspect	0.2	0.5					A-A
		Service			2.0				
		Test					8.0		D-D
		Replace			12.0			2	R-R
		Repair			24.0			2	
		Overhaul					48.0		T-B

Section II. MAINTENANCE ALLOCATION CHART (continued)

(1) Group Number	(2) Component/ Assembly	(3) Maintenance Function	(4) Maintenance Category C	O	F	H	D	(5) Tools and Equipment	(6) Remarks
2002	Foundation Brake-shoe and Brake-Head	Inspect	0.1	0.5					A-A
		Replace		8.0				1	
		Repair		10.0				1	
21	TRACTION MOTORS GROUP								
2101	Motor, Traction	Inspect		1.0				A-A	
		Service		1.0					
		Test			4.0			2,6	A-F,C-C
		Replace			32.0			2	R-A
		Repair			24.0			2,7	
		Overhaul					40.0		
2102	Brushes, Carbon	Inspect		1.0					A-A
		Replace		4.0				1	
2103	Holder, Brush	Inspect		1.0					A-A
		Adjust		2.0				1,10	
		Replace		4.0				1	
		Repair			6.0			2	
22	WHEELS AND AXLES GROUP								
2201	Wheels	Inspect	0.5	2.0				A-A	
		Replace					24.0		
		Repair			36.0			2,8	
2202	Axles	Inspect		2.0					A-A
		Replace					24.0		
		Repair					36.0		
2203	Axle Roller Bearings	Inspect		1.0					A-A
		Replace					36.0		
23	DRAFT GEAR GROUP								
2301	Couplers	Inspect		2.0					A-A,
		Service		0.2					
		Replace			16.0			2	E-B
		Repair			24.0			2	

Section III. TOOL AND TEST EQUIPMENT REQUIREMENTS

TOOL OR TEST EQUIPMENT REF CODE	MAINTENANCE CATEGORY	NOMENCLATURE	NATIONAL/NATO STOCK NUMBER	TOOL NUMBER
1	0	Tool Set, Ambulance Train Maintenance Crew	4940-00-596-1478	SC4940-97-CL-E16
2	F,H	Diesel-Electric, Platoon	4940-00-219-8882	SC4940-97-CL-E12
3	O,F,H	Torch Outfit, Cut-ting and Welding	3433-00-026-4718	WS606943A-11 (33255)
4	O,F,H	Machine, Welding	3432-00-893-3743	MIL-W-45844
5	F	Tester, Air Gage, Portable	FSCM 30187	P/N 700-1
6	F	Megohmmeter	FSCM 30015	P/N 260-6
7	F	Micrometer, Depth	5210-00-826-5368	GGG-C-105 (80244)
8	F	Lathe, Wheel, Portable	FSCM 96992	P/N 3/4 inch
9	0	Hydrometer, Duo-check	6630-00-105-1418	10425 (07043)
10	0	Small Spring Scale	4910-00-366-1476	8068027 (24617)
11	0	Gage, Wheel (2)	5210-00-377-6582 5210-00-267-2741	B-47 (95857) B-49 (75857)

Section IV. REMARKS

REFERENCE CODE	REMARKS
A-A	Visual Inspection
A-B	Visual and Audible Inspection
A-C	Calibrate
A-D	Check Fluid Level
A-E	Hydrometer Test
A-F	Continuity Test
B-B	Test for Known Voltage at Terminals
C-C	Megger Test
D-D	Tram
E-B	Measure Coupler Slack
I-I	Weld and Straighten
O-B	Insulation Breakdown and Continuity Test
P-B	Flush System
R-A	Suitable Lifting Device, from 20 to 30 Tons
R-R	Suitable Lifting Device, Equal to 40 Tons
T-B	Magnaflux
W-B	Pressure Test
X-B	Orifice Test
Y-Y	Stationary Air Test Using Locomotive Air Pressure
Y-Z	Hydrostatic Test

APPENDIX C

COMPONENTS OF END ITEM AND BASIC ISSUE ITEMS LISTS

Section I. INTRODUCTION

C-1. SCOPE

This appendix lists components of end item and basic issue items for the locomotive to help you inventory items required for safe and efficient operation.

C-2. GENERAL

The Components of End Item and Basic Issue Items Lists are divided into the following sections:

a. Section II. Components of End Item. This listing is for informational purposes only, and is not authority to requisition replacements. These items are connected, coupled, linked, affixed, mounted, or combined with other components to form the end item. As part of the end item, these items must be with the end item whenever it is issued or transferred between property accounts. Illustrations are furnished to assist you in identifying the items.

b. Section III. Basic Issue Items (BII). These are the minimum essential items required to place the locomotive in operation, to operate it, and to perform emergency repairs. Although packaged separately, BII must be with the locomotive during operation and whenever it is transferred between property accounts. The illustrations will assist you with hard-to-identify items. This manual is your authority to request/requisition replacement BII, based on TOE/MTOE authorization of the end item.

C-3. EXPLANATION OF COLUMNS

The following provides an explanation of columns found in the tabular listings:

a. Column (1) - Illustration Number (Illus Number). This column indicates the number of the illustration in which the item is shown.

b. Column (2) - National Stock Number. Indicates the National Stock Number assigned to the item and which will be used for requesitioning purposes.

c. Column (3) - Description. Indicates the Federal item name and, if required, a minimum description to identify and locate the item. The last line for each item indicates the FSCM (in parentheses) followed by the part number.

d. Column (4) - Unit of Measure (U/M). Indicates the measure used in performing the actual operational/maintenance function. This measure is expressed by a two-character alphabetical abbreviation (e.g., ea, in.,pr).

e. Column (5) - Quantity required (Qty Rqr). Indicates the quantity of the item authorized to be used with/on the equipment.

Section II. COMPONENTS OF END ITEM

(NONE AUTHORIZED)

Section III. BASIC ISSUE ITEMS

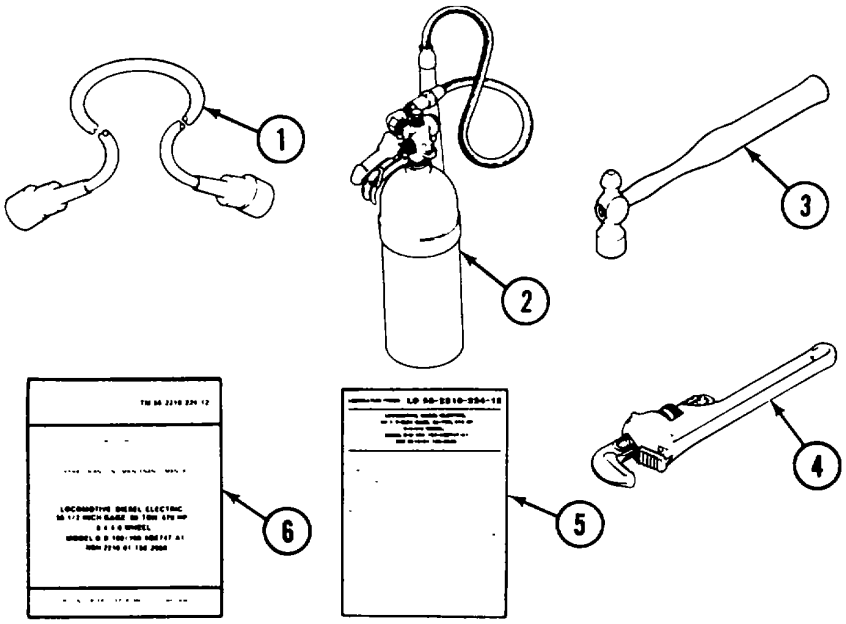

(1) Illus Number	(2) National Stock Number	(3) Description FSCM and Part Number	(4) U/M	(5) Qty Rqr
1	2240-00-392-3080	Jumper, multiple-unit control 9948186G10 (18097)	EA	1
2	4210-00-965-1108	Fire extinguisher, w/bracket CS4210-0009AEJ (16236)	EA	2
3	5120-00-061-8546	Hammer, ball peen A-A-1305 (58536)	EA	1
4	5120-00-277-1462	Wrench, pipe, adjustable 1/8-inch GGG-W-651 (81348)	EA	1
5		LO 55-2210-224-12, Lubrication Order, Locomotive-Diesel-Electric, 56-1/2-inch gage, 80-ton, 670 HP, 0-4-4-0 Wheel, Model B-B-160/160-4GE747-A1 NSN 2210-01-158-2980	EA	1
6		TM 55-2210-224-12, Operator and Unit Maintenance Manual, Locomotive-Diesel-Electric, 56-1/2-inch gage, 80-ton, 670 HP, 0-4-4-0 Wheel, Model B-B-160/160-4GE747-A1 NSN 2210-01-158-2980 TM 5-2815-233-14, Operator, Unit, Intermediate Direct Support, and Intermediate General Support Maintenance Manual, Diesel Engine, Cummins Model NTA 855-L4	EA	1

APPENDIX D

ADDITIONAL AUTHORIZATION LIST

(NONE AUTHORIZED)

APPENDIX E

EXPENDABLE/DURABLE SUPPLIES AND MATERIALS LIST

Section I. INTRODUCTION

E-1 SCOPE.

This listing is for information purposes only and is not authority to requisition the listed items. These items are authorized to you by CTA 50-970 or CTA 8-100, Expendable/Durable Items (Except Medical, Class V, Repair Parts, and Heraldic Items).

E-2 EXPLANATION OF COLUMNS.

a. Column 1 - Item Number. This number is assigned to the entry in the listing and is referenced in the narrative instructions to identify the material, e.g., Use drycleaning solvent (item 23, app E).

b. Column 2 - Category. This column identifies the lowest category of maintenance that requires the listed item.

C - Operator/Crew
O - Organizational Maintenance

c. Column 3 - National Stock Number. This is the National Stock Number assigned to the item; use it to request or requisition the item.

d. Column 4 - Description. Indicates the Federal item name and, if required, a description to identify the item. The last line of each item indicates the Federal Supply Code for Manufacturer (FSCM) in parentheses, followed by the part number.

e. Column 5 - Unit of Measure (U/M). Indicates the measure used in performing the actual maintenance function. This measure is expressed by a two-character alphabetical abbreviation (e.g., ea, in., pr). A V in this column indicates that the amount used will vary. If the unit of measure differs from the unit of issue, requisition the lowest unit of issue that will satisfy your requirements.

Section II. EXPENDABLE SUPPLIES AND MATERIALS LIST

(1) Item No.	(2) Category	(3) National Stock Number	(4) Description	(5) U/M
1	C	6850-00-181-7940	Antifreeze, Ethylene Glycol, Inhibited, (81349) MIL-A-46153	gl
2	O	5350-00-246-0330	Cloth, Coated, Abrasive Aluminum Oxide, 320 grit (81348) P-C-451	ea
3	O	7930-00-282-9699	Detergent, General Purpose, Liquid, WS, A (81439) MIL-D-16791	gl
4	O	6810-00-107-1510	Distilled Water, ASCI (81348) O-C-265	gl
5	O	9150-00-190-0904	Grease, Automotive and Artillery GAA, (81349) MIL-G-10924	lb
6	O		Grease, Brake Cylinder, DD (59595) AAR-M-914-70	lb
7	O		Grease, Ball and Roller Bearing, BB (93508) RA-71005	lb
8	O	9150-00-272-7652	Grease, Graphite, GG-1 (81348) VV-G-671	lb
9	O	9150-00-269-8255	Grease, Pneumatic System, GPS (81349) MIL-G-4343	lb
10	O		Lubricant, Center Plate, Graphite, DD (59595) 57-40W	ea
11	C		Lubricating Oil, Engine OE/HDO (81349) MIL-L-2104D	
		9150-00-191-2772	Grade 10 W 5-gal (18.93 L) can	gl
		9150-01-152-4119	Grade 15-40 W 55-gal (208.2 L) drum	gl
		9150-00-189-6729	Grade 30 W 55-gal (208.2 L) drum	gl
12	C	9150-00-491-7197	Lubricating Oil, Engine (Arctic), OEA (81349) MIL-L-46167	gl
13	O		Lubricating Oil, Gear, Multi-purpose, GO (81349) MIL-L-2105 Grade 90 W	gl
		9150-01-035-5393	5-gal (18.93 L) can Grade 140 W	gl
		9150-01-035-5395	5-gal (18.93 L) can	gl

Section II. EXPENDABLE SUPPLIES AND MATERIALS LIST (continued)

(1) Item No.	(2) Category	(3) National Stock Number	(4) Description	(5) U/M
14	C	9150-00-231-9045	Lubricating Oil, General Purpose, LO (81348) VV-L-820	gl
15	O		Lubricating Oil, Railway Car, AA (59595) 57-40W	gl
16	C	9140-00-286-5286	Oil, Fuel, Diesel, DF-1, Winter (81348) VV-F-800	gl
17	C	9140-00-286-5294	Oil, Fuel, Diesel, DF-2, Regular (81349) VV-F-800	gl
18	O	8010-00-297-0591	Paint, Rubberized Insulating Epoxy (09861)	gl
19	O	9150-00-250-0933	Petrolatum, Technical (81348) VV-P-236	gl
20	C	7920-00-205-3570	Rags, Wiping, Cotton, General-Purpose, class 2, grade 2	
21	O	5133-00-839-5478	Rod, Drill, General Purpose 1/8 inch diameter, 12 inches length (18056) D3512B	ea
22	O	6810-00-264-6618	Soda, Bicarbonate of	lb
23	C	6850-00-281-1985	Solvent, Drycleaning, SD-II (81348) P-D-680	gl
24	O	5345-00-105-2236	Stone, Soap, Soft (30119) 23-004S	ea
25	O	8030-00-889-3534	Tape, Antiseize, Polytetra-fluorthylene, Class 1 (81349) MIL-T-27730	yd
26	O	5970-00-955-9976	Tape, Electrical Pressure Sensitive (07009) MS70TO9-S	rl
27	O	7510-01-146-7767	Tape, Pressure Sensitive, Adhesive, Class 1 (81348) PPP-T-60	yd

APPENDIX F

ILLUSTRATED LIST OF MANUFACTURED ITEMS

F-1. INTRODUCTION

This appendix includes complete instructions for making items authorized to be manufactured or fabricated at unit maintenance.

F-2. FUEL FILLER PLUG REMOVAL TOOL

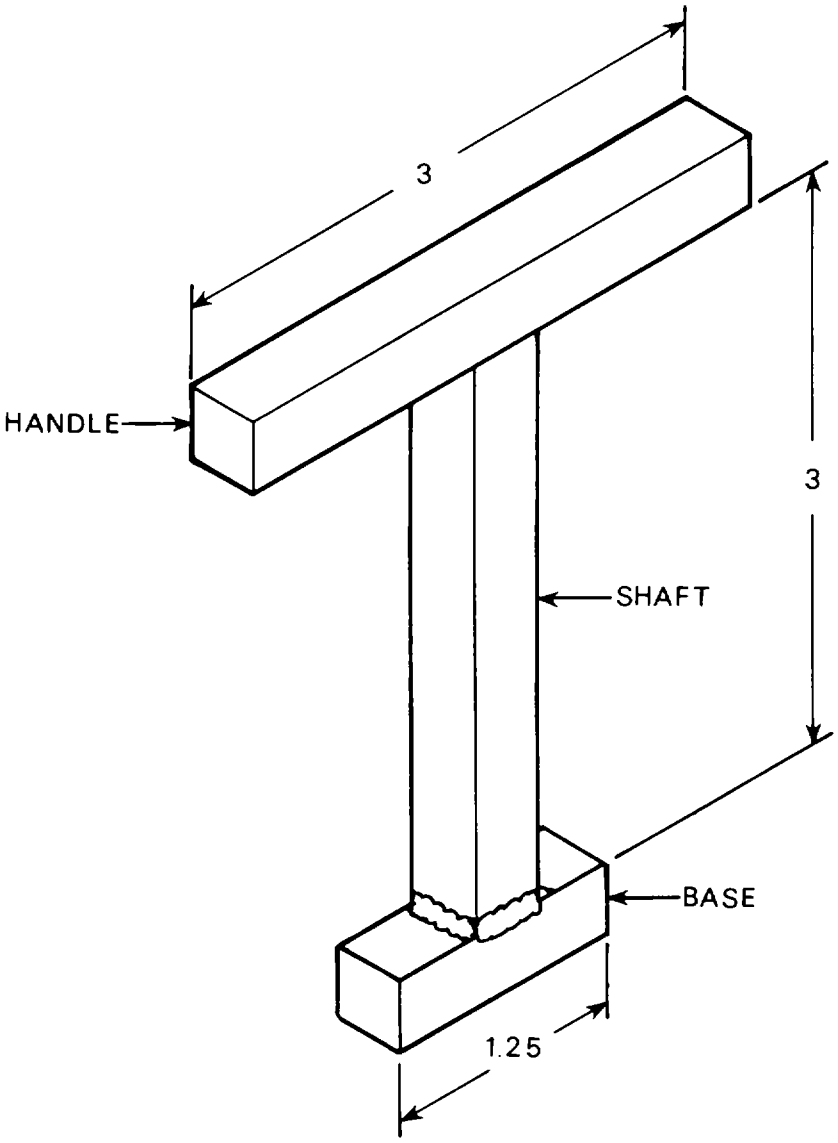

NOTES:

1. **FABRICATE FROM A PIECE OF 5/8 X 5/8 SQUARE BAR STOCK STEEL ASTM A108.**
2. **TAPER BOTH ENDS OF THE SHAFT FOR ACCEPTANCE OF WELD. ARC WELD THE THREE PARTS TOGETHER.**
3. **ALL DIMENSIONS ARE IN INCHES.**

F-1/F-2 blank)

80-TON LOCOMOTIVE

SCHEMATICS

Change 1 Appendix G/(blank)

APPENDIX G

WIRING SCHEMATICS

SYMBOLOGY USED FOR 80 TON LOCOMOTIVE STATION LOCATOR

ALTERNATOR or AC MOTOR

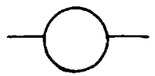

SINGLE-PHASE

BATTERY

BELL

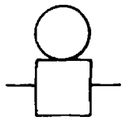

CIRCUIT BREAKER

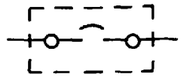

DC GENERATOR or MOTOR

ARMATURE

FIELD WINDING

DIODES

INDICATES RED TERMINAL

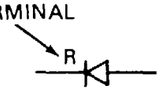

SUPPRESSION

FUSE

GROUND

LAMPS

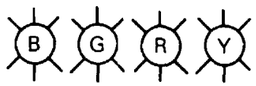

INDICATOR (SHOW LENS COLOR)

ILLUMINATION

METERS

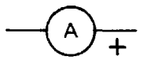

AMMETER

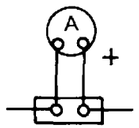

AMMETER w/SHUNT

PLUGS and RECEPTACLES

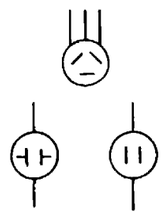

UTILITY POWER

RECTIFIERS

INDICATES RED TERMINAL

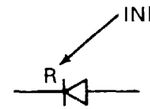

HALF WAVE

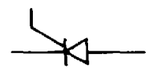

CONTROLLED (SCR)

RELAYS and CONTACTORS

DOUBLE BREAK CONTACTS

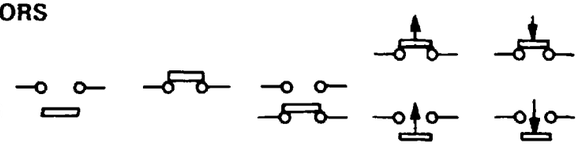

NORMALLY OPEN | NORMALLY CLOSED | DOUBLE THROW | DELAYED PICKUP | DELAYED DROPOUT

SINGLE BREAK CONTACTS

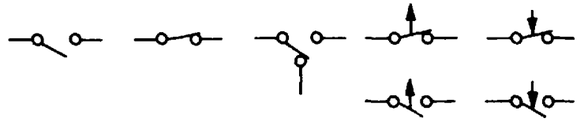

OPERATING COIL

NOTE:
DRAW NORMALLY OPEN CONTACTS ON BOTTOM OR RIGHT SIDE, AND NORMALLY CLOSED CONTACTS ON TOP OR LEFT SIDE

RESISTORS

SHOW RESISTANCE VALUE INSIDE SYMBOL

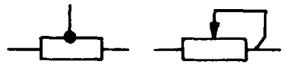

TAPPED | ADJUSTABLE

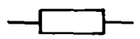

FIXED

RHEOSTAT

SWITCHES

ROTARY MANUAL

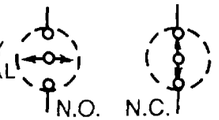

SNAP ACTION

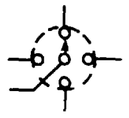

MULTIPOSITION

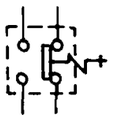

PUSHBUTTON w/ SPRING RETURN

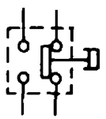

PRESSURE

THERMAL

SINGLE BREAK MANUAL

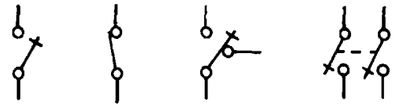

DOUBLE BREAK MANUAL

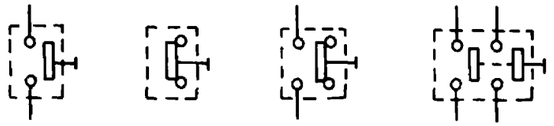

NORMALLY OPEN | NORMALLY CLOSED | DOUBLE THROW | GANGED

SYMBOLOGY
USED FOR
80 TON LOCOMOTIVE
STATION LOCATOR
(CONTINUED)

SOLENOID VALVE

TERMINALS

SCREW OR
FASTON

BOLTED

TERMINAL PAIR
w/INTERNAL JUMPER

TIMER

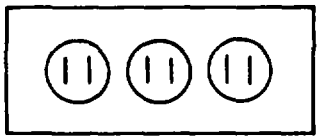

TRANSFORMERS

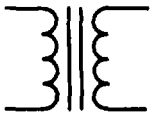

SINGLE
SECONDARY

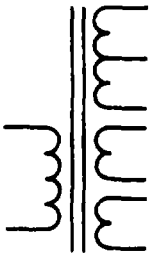

MULTIPLE SECONDARY
w/TAPPED WINDING

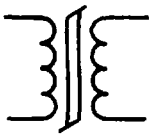

SATURABLE
CORE

CURRENT

REF DES TO ITEM NAME LOCATOR

REF DES	ITEM NAME	PAGE	ZONE
AB 1	Auxiliary Circuit Breaker	G-21	C1
ACMV	Air Compressor Magnet Valve	G-45	BD2
ACPS	Air Compressor Pressure Switch	G-45	BC1
ACR1	Safety Relay	G-31	X1
ACR2	Safety Relay	G-31	Y1
ALT 1	Alternator w/internal Regulator	G-37	AN2
ALT 2	Alternator w/internal Regulator	G-47	BH2
ASM1	Alternator Suppressor Module	G-37	AN2
ASM2	Alternator Suppressor Module	G-47	BH2
BATTERY 1	Storage Batteries 1	G-53	BW2
BATTERY 2	Storage Batteries 2	G-53	BW2
BD1, 2, 3	Blocking Diodes	G-35	AG1
BD4, 5	Blocking Diodes	G-33	AE1
BD7, 8	Blocking Diodes	G-25	L1
BD12, 13	Blocking Diodes	G-33	AC1
BELL	Warning Bell	G-23	El
BS	Battery Switch	G-27	R1
BUZ	Warning Buzzer	G-23	El
BV1	Battery Voltmeter	G-21	Al
BVG	Battery Voltmeter Gage	G-25	J2
CB1	Control Circuit Breaker	G-21	C1
CBL1, 2, 3	Cab Lights	G-53	BX1
CBLS1	Cab Light Switch	G-21	D1

REF DES TO ITEM NAME LOCATOR

REF DES	ITEM NAME	PAGE	ZONE
CH1	Cab Heater	G-37	AK1
CK1	Cranking Contactor	G-33	AC2
CK2	Cranking Contactor	G-33	AE2
CWLS1	Cowling Light Switch	G-23	E2
CWL1	Cowling Light	G-53	BY2
CWL2	Cowling Light	G-53	BY2
CWL3	Cowling Light	G-53	BY2
CWL4	Cowling Light	G-53	BY2
DV1	Dump Valve	G-53	BW1
DV2	Dump Valve	G-53	BW1
EH1	Engine Heater	G-49	BP1
EH2	Engine Heater	G-49	BP2
EHR1	Engine Heater Receptacle	G-49	BM1
EHR2	Engine Heater Receptacle	G-49	BM2
EPG1, 2	Engine Oil Pressure Gage Lights	G-25	J2
ES1	Engine Start Switch	G-21	B1
ES2	Engine Start Switch	G-21	B1
ESD1	Engine Stop Switch	G-21	B2
ESD2	Engine Stop Switch	G--21	B2
ESDS1	Engine Stop Solenoid	G-36	AP1
ESDS2	Engine Stop Solenoid	G-47	BK2
ESS	Emergency Sanding Switch	G-45	BC2
ETG1, 2	Engine Temperature Gage Lights	G-25	J2

REF DES TO ITEM NAME LOCATOR

REF DES	ITEM NAME	PAGE	ZONE
ETS1	Engine Temperature Switch	G-37	AM2
ETS2	Engine Temperature Switch	G-47	BG2
ETWB	Engine Temperature Warning	G-23	E1
ETWR	Engine Temperature Warning Relay	G-31	Y2
FH1, 2	Front Headlight	G-53	BX2
FHS1	Front Headlight Switch	G-21	C2
FS1	Field Shunt Contactor	G-51	BU2
FS2	Field Shunt Contactor	G-51	BU2
FS3	Field Shunt Contactor	G-51	BR2
FS4	Field Shunt Contactor	G-51	BR2
FSR1	Field Shunt Resistor	G-51	BU1
FSR2	Field Shunt Resistor	G-51	BU1
FSR3	Field Shunt Resistor	G-51	BR1
FSR4	Field Shunt Resistor	G-51	BR1
FV1	Filter Valve	G-53	BV2
FV2	Filter Valve	G-53	BV2
G1	Traction Generator	G-37	AM1
G2	Traction Generator	G-47	BG1
GFR1	Generator Field Resistor	G-41	AW1
GFR2	Generator Field Resistor	G-41	AW2
GFR21	Generator Field Resistor	G-43	BA1
GFR22	Generator Field Resistor	G-43	BA2
GL1, 2	Gage Lights	G-25	J1

REF DES TO ITEM NAME LOCATOR

REF DES	ITEM NAME	PAGE	ZONE
GLR	Gage Light Resistors	G-25	K1
GLRH	Gage Light Rheostat	G-25	J1
GLS1	Gage Light Switch	G-21	D1
GR	Ground Relay	G-33	AD2
GRCO	Ground Relay Cutout Switch	G-33	AD1
GRL1	Ground Relay Indicator Light	G-23	F1
GRRS1	Ground Relay Reset Switch	G-23	E2
HLR1	Headlight Resistor	G-41	AX2
HLR2	Headlight Resistor	G-43	BB2
ILR1	Indicating & Gage Light Resistor	G-25	L2
ILR2	Indicating Light Resistor	G-25	L2
LA1	Loadmeter	G-21	B1
LA2	Loadmeter	G-21	B1
LAG1	Loadmeter Gage	G-25	J2
LAG2	Loadmeter Gage	G-25	J2
LAS1	Load Ammeter Shunt	G-31	AA2
LAS2	Load Ammeter Shunt	G-31	AA2
M1	Traction Motor	G-37	AL1
M2	Traction Motor	G-37	AL1
M3	Traction Motor	G-37	AL2
M4	Traction Motor	G-37	AL2
MC	Master Controller	G-23	G1
MKR	Motor Kill Relay	G-35	AJ2

REF DES TO ITEM NAME LOCATOR

REF DES	ITEM NAME	PAGE	ZONE
MUHL	Multiple Unit Headlight Switch	G-23	F2
OPS1	Engine Oil Pressure Switch	G-39	AP2
OPS2	Engine Oil Pressure Switch	G-47	BK2
P1	Power Contactor	G-33	AB1
P2	Power Contactor	G-33	AB2
P3	Power Contactor	G-35	AF2
P4	Power Contactor	G-35	AG2
PCS	Pressure Control Switch	G-45	BD1
PNTB	Positive & Negative Terminal Board	G-31	AA1
R	Reverser Cabinet	G-51	BS1
RECP 1	Receptacle for MU	G-55	CB1
RECP 2	Receptacle for MU	G-55	CA2
RH1, 2	Rear Headlight	G-53	BX2
RHS1	Rear Headlight Switch	G-21	C2
SCPS	Safety Control Pressure Switch	G-45	BC1
SDS1	Sanding Switch	G-21	A1
SESD1	Emergency Fuel Cut-off Switch	G-49	BL1
SESD2	Emergency Fuel Cut-off Switch	G-49	BL2
SLS1	Step Light Switch	G-21	D1
SM	Service Meter	G-21	B1
SMV1	Sanding Magnet Valve	G-53	BV1
SMV2	Sanding Magnet Valve	G-53	BV1
SSA	Speed Sensing Alternator	G-37	AK2

REF DES TO ITEM NAME LOCATOR

REF DES	ITEM NAME	PAGE	ZONE
STL1	Step Light	G-53	BY1
STL2	Step Light	G-53	BY1
STL3	Step Light	G-53	BY1
STL4	Step Light	G-53	BY1
TIMER	Timer	G-35	A J1
T1	Fuel Coil	G-39	AT1
T2	Fuel Coil	G-39	AT1
T3	Fuel Coil	G-39	AT2
T4	Fuel Coil	G-39	AT2
T21	Fuel Coil	G-47	BK1
T22	Fuel Coil	G-47	BK1
T23	Fuel Coil	G-47	BK1
T24	Fuel Coil	G-47	BK1
TB1	Terminal Board	G-29	T1
TB2	Terminal Board	G-29	T2
TB10	Terminal Board	G-45	BE1
TB11	Terminal Board	G-45	BF1
TB13	Terminal Board	G-39	AR1
TB14	Terminal Board	G-47	BJ1
TB17	Terminal Board	G-55	BZ1
TB18	Terminal Board	G-55	CC1
TB19	Terminal Board	G-41	AU1
TB20	Terminal Board	G-45	AY1

REF DES TO ITEM NAME LOCATOR

REF DES	ITEM NAME	PAGE	ZONE
TB37	Terminal Board	G-49	BN1
TB38	Terminal Board	G-49	BN2
TB51	Terminal Board	G-25	M1
TB52	Terminal Board	G-27	N1
TB53	Terminal Board	G-27	P1
TB61	Terminal Board	6-27	S1
TR	Field Shunt Transistor Relay	G-31	X2
TRP	Transition Panel	G-29	T1
WLS1	Warning Light Switch	G-21	D2
WSL1	Wheelslip Indicating Light	G-23	F1
WSR1	Wheelslip Relay	G-29	W1
WSR2	Wheelslip Relay	G-29	W2
WSRR1, 2	Wheelslip Resistor Panel	G-29	W1

ITEM NAME TO REF DES LOCATOR

ITEM NAME	REF DES	PAGE	ZONE
Auxiliary Circuit Breaker	AB 1	G-21	C1
Air Compressor Magnet Valve	ACMV	G-45	BD2
Air Compressor Pressure Switch	ACPS	G-45	BC1
Safety Relay	ACR1	G-31	X1
Safety Relay	ACR2	G-31	Y1
Alternator w/internal Regulator	ALT 1	G-37	AN2
Alternator w/internal Regulator	ALT 2	G-47	BH2
Alternator Suppressor Module	ASM1	G-37	AN2
Alternator Suppressor Module	ASM2	G-47	BH2
Storage Batteries 1	BATTERY 1	G-53	BW2
Storage Batteries 2	BATTERY 2	G-53	BW2
Blocking Diodes	BD1, 2, 3	G-35	AG1
Blocking Diodes	BD4, 5	G-33	AE1
Blocking Diodes	BD7, 8	G-25	L1
Blocking Diodes	BD12, 13	G-33	AC1
Warning Bell	BELL	G-23'	E1
Battery Switch	BS	G-27	R1
Warning Buzzer	BUZ	G-23	E1
Battery Voltmeter	BV1	G-21	A1
Battery Voltmeter Gage	BVG	G-25	J2
Control Circuit Breaker	CB1	G-21	C1
Cab Lights	CBL1, 2, 3	G-53	BX1
Cab Light Switch	CBLS1	G-21	D1

ITEM NAME TO REF DES LOCATOR

ITEM NAME	REF DES	PAGE	ZONE
Cab Heater	CH1	G-37	AK1
Cranking Contactor	CK1	G-33	AC2
Cranking Contactor	CK2	G-33	AE2
Cowling Light Switch	CWLS1	G-23	E2
Cowling Light	CWL1	G-53	BY2
Cowling Light	CWL2	G-53	BY2
Cowling Light	CWL3	G-53	BY2
Cowling Light	CWL4	G-53	BY2
Dump Valve	DV1	G-53	BW1
Dump Valve	DV2	G-53	BW1
Engine Heater	EH1	G-49	BP1
Engine Heater	EH2	G-49	BP2
Engine Heater Receptacle	EHR1	G-49	BM1
Engine Heater Receptacle	EHR2	G-49	BM2
Engine Oil Pressure Gage Lights	EPG1, 2	G-25	J2
Engine Start Switch	ES1	G-21	B1
Engine Start Switch	ES2	G-21	B1
Engine Stop Switch	ESD1	G-21	B2
Engine Stop Switch	ESD2	G-21	B2
Engine Stop Solenoid	ESDS1	G-39	AP1
Engine Stop Solenoid	ESDS2	G-47	BK2
Emergency Sanding Switch	ESS	G-45	BC2
Engine Temperature Gage Lights	ETG1, 2	G-25	J2

ITEM NAME TO REF DES LOCATOR

ITEM NAME	REF DES	PAGE	ZONE
Engine Temperature Switch	ETS1	G-37	AM2
Engine Temperature Switch	ETS2	G-47	BG2
Engine Temperature Warning	ETWB	G-23	El
Engine Temperature Warning Relay	ETWR	G-31	Y2
Front Headlight	FH1, 2	G-53	BX2
Front Headlight Switch	FHS1	G-21	C2
Field Shunt Contactor	FS1	G-51	BU2
Field Shunt Contactor	FS2	G-51	BU2
Field Shunt Contactor	FS3	G-51	BR2
Field Shunt Contactor	FS4	G-51	BR2
Field Shunt Resistor	FSR1	G-51	BU1
Field Shunt Resistor	FSR2	G-51	BU1
Field Shunt Resistor	FSR3	G-51	BR1
Field Shunt Resistor	FSR4	G-51	BR1
Filter Valve	FV1	G-53	BV2
Filter Valve	FV2	G-53	BV2
Traction Generator	G1	G-37	AM1
Traction Generator	G2	G-47	BG1
Generator Field Resistor	GFR1	G-41	AW1
Generator Field Resistor	GFR2	G-41	AW2
Generator Field Resistor	GFR21	G-43	BA1
Generator Field Resistor	GFR22	G-43	BA2
Gage Lights	GL1, 2	G-25	J1

ITEM NAME TO REF DES LOCATOR

ITEM NAME	REF DES	PAGE	ZONE
Gage Light Resistors	GLR	G-25	K1
Gage Light Rheostat	GLRH	G-25	J1
Gage Light Switch	GLS1	G-21	D1
Ground Relay	GR	G-33	AD2
Ground Relay Cutout Switch	GRCO	G-33	AD1
Ground Relay Indicator Light	GRL1	G-23	F1
Ground Relay Reset Switch	GRRS1	G-23	E2
Headlight Resistor	HLR1	G-41	AX2
Headlight Resistor	HLR2	G-43	BB2
Indicating & Gage Light Resistor	ILR1	G-25	L2
Indicating Light Resistor	ILR2	G-25	L2
Loadmeter	LA1	G-21	B1
Loadmeter	LA2	G-21	B1
Loadmeter Gage	LAG1	G-25	J2
Loadmeter Gage	LAG2	G-25	J2
Load Ammeter Shunt	LAS1	G-31	AA2
Load Ammeter Shunt	LAS2	G-31	AA2
Traction Motor	M1	G-37	AL1
Traction Motor	M2	G-37	AL1
Traction Motor	M3	G-37	AL2
Traction Motor	M4	G-37	AL2
Master Controller	MC	G-23	G1
Motor Kill Relay	MKR	G-35	AJ2

ITEM NAME TO REF DES LOCATOR

ITEM NAME	REF DES	SHEET	ZONE
Multiple Unit Headlight Switch	MUHL	G-23	F2
Engine Oil Pressure Switch	OPS1	G-39	AP2
Engine Oil Pressure Switch	OPS2	G-47	BK2
Power Contactor	P1	G-33	AB1
Power Contactor	P2	G-33	AB2
Power Contactor	P3	G-35	AF2
Power Contactor	P4	G-35	AG2
Pressure Control Switch	PCS	G-45	BD1
Positive & Negative Terminal Board	PNTB	G-31	AA1
Reverser Cabinet	R	G-51	BS1
Receptacle for MU	RECP 1	G-55	CB1
Receptacle for MU	RECP 2	G-55	CA2
Rear Headlight	RH1, 2	G-53	BX2
Rear Headlight Switch	RHS1	G-21	C2
Safety Control Pressure Switch	SCPS	G-45	BC1
Sanding Switch	SDS1	G-21	A1
Emergency Fuel Cut-off Switch	SESD1	G-49	BL1
Emergency Fuel Cut-off Switch	SESD2	G-49	BL2
Step Light Switch	SLS1	G-21	D1
Service Meter	SM	G-21	B1
Sanding Magnet Valve	SMV1	G-53	BV1
Sanding Magnet Valve	SMV2	G-53	BV1
Speed Sensing Alternator	SSA	G-37	AK2

ITEM NAME TO REF DES LOCATOR

ITEM NAME	REF DES	SHEET	ZONE
Step Light	STL1	G-53	BY1
Step Light	STL2	G-53	BY1
Step Light	STL3	G-53	BY1
Step Light	STL4	G-53	BY1
Timer	TIMER	G-35	AJ 1
Fuel Coil	T1	G-39	AT1
Fuel Coil	T2	G-39	AT1
Fuel Coil	T3	G-39	AT2
Fuel Coil	T4	G-39	AT2
Fuel Coil	T21	G-47	BK1
Fuel Coil	T22	G-47	BK1
Fuel Coil	T23	G-47	BK1
Fuel Coil	T24	G-47	BK1
Terminal Board	TB1	G-29	T1
Terminal Board	TB2	G-29	T2
Terminal Board	TB10	G-45	BE1
Terminal Board	TB11	G-45	BF1
Terminal Board	TB13	G-39	AR1
Terminal Board	TB14	G-47	BJ1
Terminal Board	TB17	G-55	BZ1
Terminal Board	TB18	G-55	CC1
Terminal Board	TB19	G-41	AU1
Terminal Board	TB20	G-41	AY1

ITEM NAME TO REF DES LOCATOR

ITEM NAME	REF DES	SHEET	ZONE
Terminal Board	TB37	G-49	BN1
Terminal Board	TB38	G-49	BN2
Terminal Board	TB51	G-25	M1
Terminal Board	TB52	G-27	N1
Terminal Board	TB53	G-27	P1
Terminal Board	TB61	G-27	S1
Field Shunt Transistor Relay	TR	G-31	X2
Transition Panel	TRP	G-29	T1
Warning Light Switch	WLS1	G-21	D2
Wheelslip Indicating Light	WSL1	G-23	F1
Wheelslip Relay	WSR1	G-29	W1
Wheelslip Relay	WSR2	G-29	W2
Wheelslip Resistor Panel	WSRR1, 2	G-29	W1

STATION LOCATOR

STATION/ LOCATION LETTER	SHT	ZONE
A	17	A1
B	17	B1
C	17	C1
D	17	D1
E	17	D1
F	17	B1
G	17	B1
H	17	Al
J	17	Al
K	17	B2
L	17	B1
M	17	C1
N	17	C2
P	17	D2
R	17	A2
S	17	B2
T	17	B2
U	17	C2
V	18	E1
W	18	F1
X	18	F1
Y	18	G1
Z	18	H1

STATION LOCATOR

STATION/ LOCATION LETTER	SHT	ZONE
AA	18	F1
AB	18	F1
AC	18	E1
AD	18	E2
AE	19	J1
AF	19	J1
AG	19	K1
AH	19	L1
AJ	19	M1
AK	19	M1
AL	19	J1
AM	19	J1
AN	19	L2
AP	20	N1
AR	20	N1
AS	20	P1
AT	20	P1
AU	20	R1
AV	20	R1
AW	20	R1
AX	20	S2
AY	21	T1
AZ	21	V1

STATION LOCATOR

STATION/ LOCATION LETTER	SHT	ZONE
BA	21	W1
BB	21	V1
BC	21	W1
BD	22	X1
BE	22	Y1
BF	22	Y1
BG	22	Z1
BH	22	Z1
BJ	22	AA1
BK	22	X1
BL	22	Y1
BM	22	Y1
BN	22	Z1
BP	22	Z2
BR	22	AA2
BS	23	AB1
BT	23	AB1
BU	23	AC1
BV	23	AC1
BW	23	AE1
BX	23	AC1
BY	23	AD1
BZ	23	AB1

STATION LOCATOR

STATION/ LOCATION LETTER	SHT	ZONE
CA	23	AC2
CB	23	AC2
CC	23	AE2
CD	23	AE2
CE	24	AG1
CF	24	AH1
CG	24	AH1
CH	24	AF1
CJ	24	AH1
CK	24	AH2
CL	24	AJ2
CM	25	AK1
CN	25	AL1
CP	25	AM1
CR	25	AM1
CS	25	AK2
CT	25	AM2
CU	25	AM2
CV	25	AN2
CW	26	AP1
CX	26	AR1
CY	26	AS1
CZ	26	AT1

STATION LOCATOR

STATION/ LOCATION LETTER	SHT	ZONE
DA	26	AT1
DB	26	AP1
DC	27	AU1
DD	27	AV1
DE	27	AW1
DF	27	AV2
DG	27	AW2
DH	28	AY1
DJ	28	AZ1
DK	28	BA1
DL	28	AZ2
DM	28	BA2
DN	29	BC1
DP	29	BC1
DR	29	BD1
DS	29	BD1
DT	29	BE1
DU	29	BE1
DV	29	BF1
DW	29	BF1
DX	29	BC1
DY	29	BD1
DZ	29	BC2

STATION LOCATOR

STATION/ LOCATION LETTER	SHT	ZONE
EA	29	BC2
EB	29	BD2
EC	29	BD2
ED	30	BG1
EE	30	BJ1
EF	30	BJ1
EG	30	BK1
EH	30	BK1
EJ	30	BG2
EK	30	BG2
EL	30	BH2
EM	30	BH2
EN	30	BK2
EP	30	BK2
ER	30	BK2
ES	30	BK2
ET	31	BL1
EU	31	BM1
EV	31	BM1
EW	31	BN1
EX	31	BN1
EY	31	BP1
EZ	31	BL2

STATION LOCATOR

STATION/ LOCATION LETTER	SHT	ZONE
FA	31	BM2
FB	31	BM2
FC	31	BN2
FD	31	BN2
FE	31	BP2
FF	32	BR1
FG	32	BS1
FH	32	BS1
FJ	32	BT1
FK	32	BT1
FL	32	BU1
FM	32	BR1
FN	32	BS1
FP	32	BT1
FR	32	BU1
FS	32	BR2
FT	32	BS2
FU	32	BT2
FV	32	BU2
FW	32	BR2
FX	32	BS2
FY	32	BT2
FZ	32	BU2

STATION LOCATOR

STATION/ LOCATION LETTER	SHT	ZONE
GA	33	BV1
GB	33	BW1
GC	33	BX1
GD	33	BX1
GE	33	BY1
GF	33	BV2
GG	33	BW2
GH	33	BW2
GJ	33	BX1
GK	33	BX2
GL	33	BY2
GM	34	BZ1
GN	34	BZ1
GP	34	CA1
GR	34	CC1
GS	34	CC1
GT	34	CB2

DRAWING IDENTIFICATION

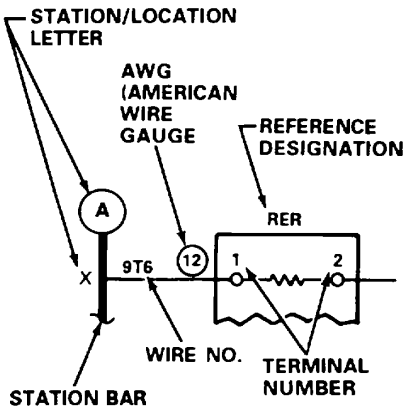

NOTES

1. ALL WIRES ARE (14) AWG (AMERICAN WIRE GAUGE) UNLESS OTHERWISE NOTE D.
2. 1/0, 2/0, 3/0, 4/0 ETC. INDICATES CABLE SIZES.

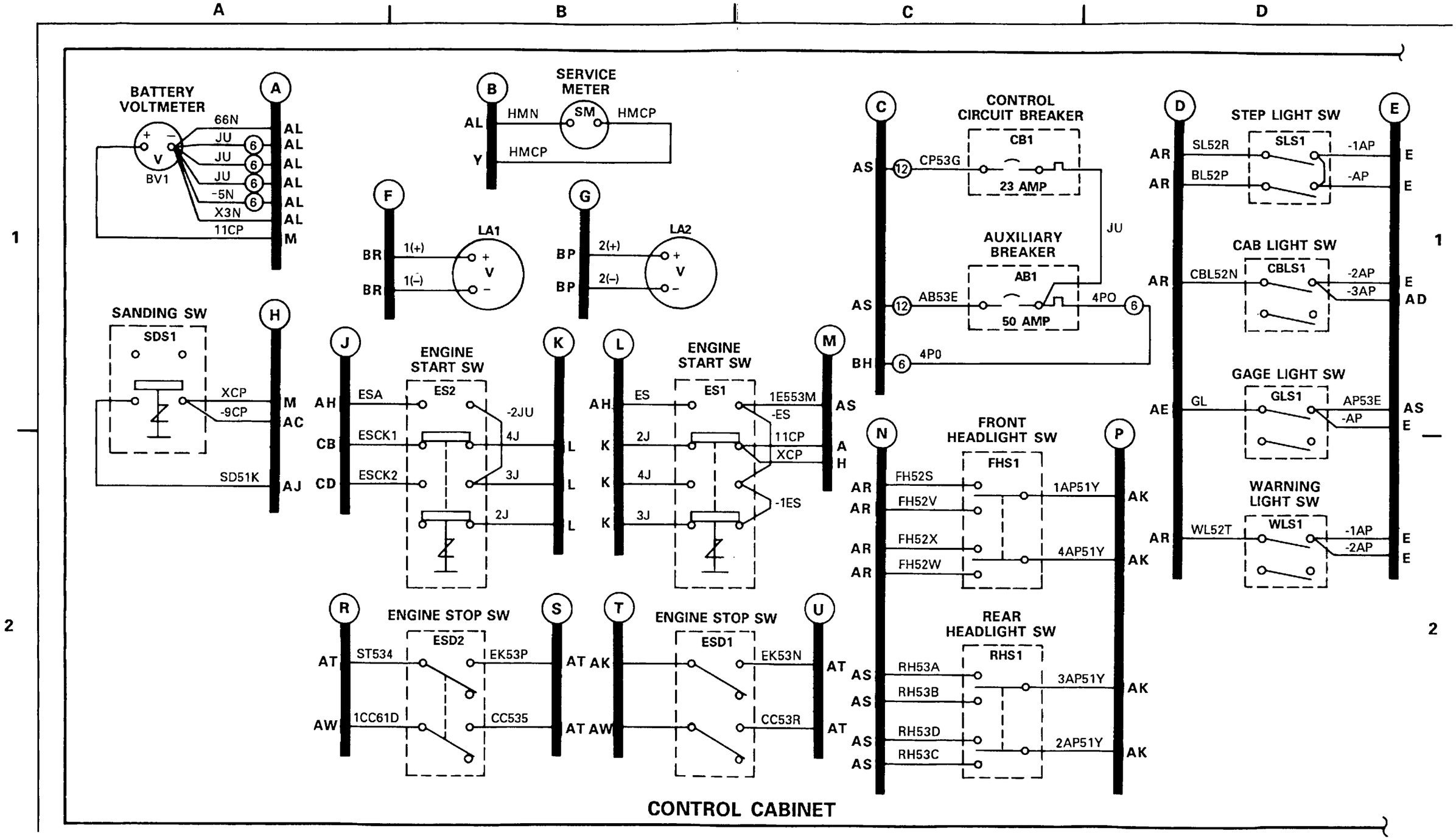
A
B
C
D
1
2
BATTERY VOLTMETER
66N
JU
JU
JU
-5N
X3N
11CP
BV1
AL
AL
AL
AL
AL
M
SERVICE METER
HMN
SM
HMCP
AL
Y
HMCP
F
BR
1(+)
1(-)
LA1
G
BP
2(+)
2(-)
LA2
CONTROL CIRCUIT BREAKER
CB1
23 AMP
AS
CP53G
JU
AUXILIARY BREAKER
AB1
50 AMP
AB53E
4PO
BH
4PO
STEP LIGHT SW
SLS1
SL52R
BL52P
-1AP
-AP
AR
AR
E
E
CAB LIGHT SW
CBLS1
CBL52N
-2AP
-3AP
AR
E
AD
GAGE LIGHT SW
GLS1
GL
AP53E
-AP
AE
AS
E
WARNING LIGHT SW
WLS1
WL52T
-1AP
-2AP
AR
E
E
SANDING SW
SDS1
XCP
-9CP
SD51K
M
AC
AJ
ENGINE START SW
ES2
ESA
ESCK1
ESCK2
-2JU
4J
3J
2J
AH
CB
CD
L
L
L
ENGINE START SW
ES1
ES
2J
4J
3J
1E553M
-ES
11CP
XCP
-1ES
AS
A
H
FRONT HEADLIGHT SW
FHS1
FH52S
FH52V
FH52X
FH52W
1AP51Y
4AP51Y
AR
AR
AR
AR
AK
AK
REAR HEADLIGHT SW
RHS1
RH53A
RH53B
RH53D
RH53C
3AP51Y
2AP51Y
AS
AS
AS
AS
AK
AK
ENGINE STOP SW
ESD2
ST534
1CC61D
EK53P
CC535
AT
AW
AT AK
AT AW
ENGINE STOP SW
ESD1
EK53N
CC53R
AT
AT
CONTROL CABINET

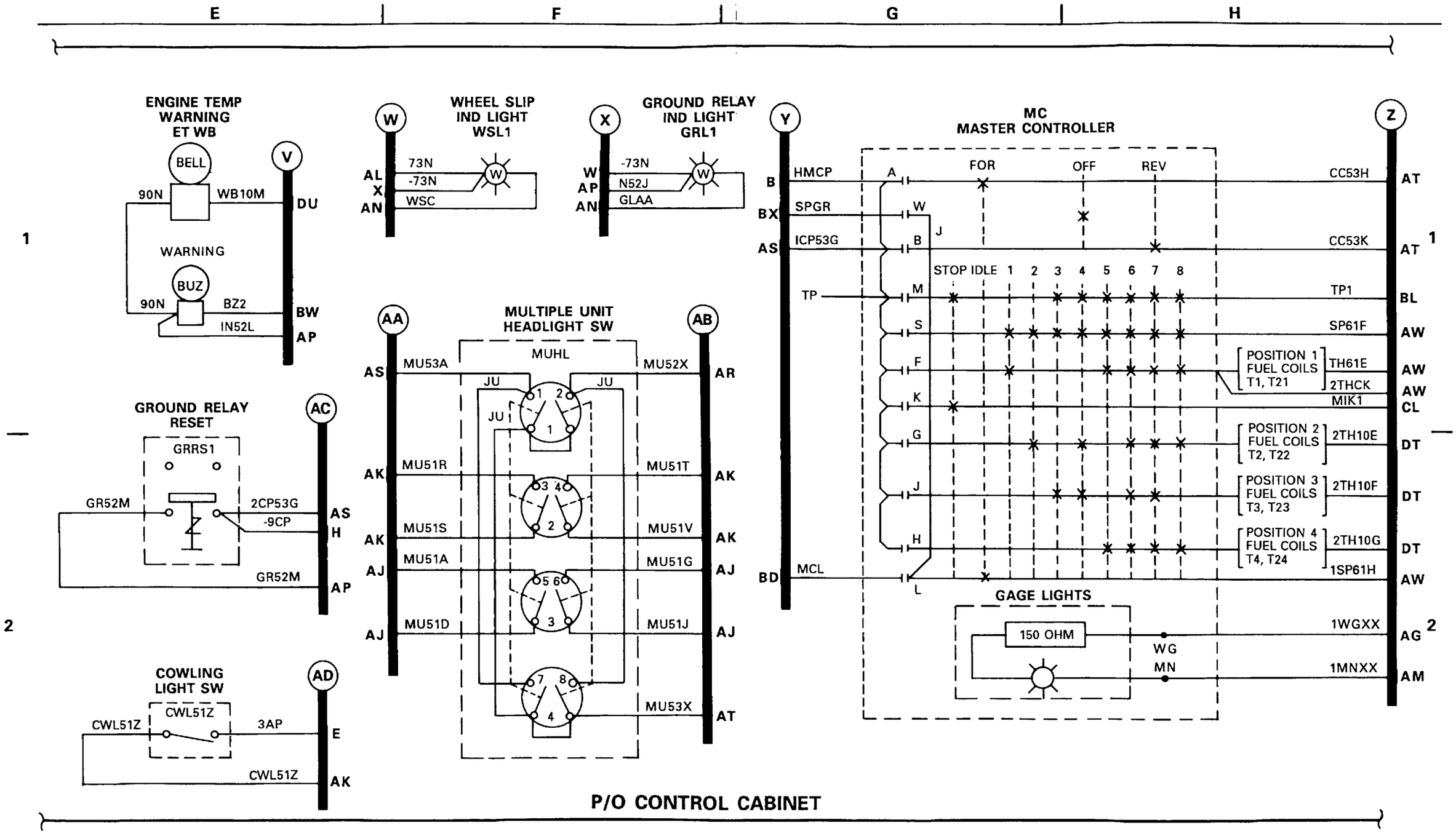
E
F
G
H
ENGINE TEMP WARNING ET WB
BELL
90N
WB10M
DU
WARNING
BUZ
90N
BZ2
IN52L
BW
AP
V
W
WHEEL SLIP IND LIGHT WSL1
AL
X
AN
73N
-73N
WSC
X
GROUND RELAY IND LIGHT GRL1
W
AP
AN
-73N
N52J
GLAA
Y
MC MASTER CONTROLLER
B
BX
AS
HMCP
SPGR
ICP53G
TP
BD
MCL
FOR
OFF
REV
STOP IDLE 1 2 3 4 5 6 7 8
CC53H
CC53K
TP1
SP61F
POSITION 1 FUEL COILS T1, T21
TH61E
2THCK
MIK1
POSITION 2 FUEL COILS T2, T22
2TH10E
POSITION 3 FUEL COILS T3, T23
2TH10F
POSITION 4 FUEL COILS T4, T24
2TH10G
1SP61H
GAGE LIGHTS
150 OHM
WG
MN
1WGXX
1MNXX
Z
AT
BL
AW
CL
DT
AG
AM
AA
AB
MULTIPLE UNIT HEADLIGHT SW
MUHL
MU53A
MU52X
JU
MU51R
MU51T
MU51S
MU51V
MU51A
MU51G
MU51D
MU51J
MU53X
AR
AK
AJ
AT
GROUND RELAY RESET
GRRS1
GR52M
2CP53G
-9CP
AC
AS
H
AP
COWLING LIGHT SW
CWL51Z
3AP
AD
E
AK
P/O CONTROL CABINET

J K L M

1

2

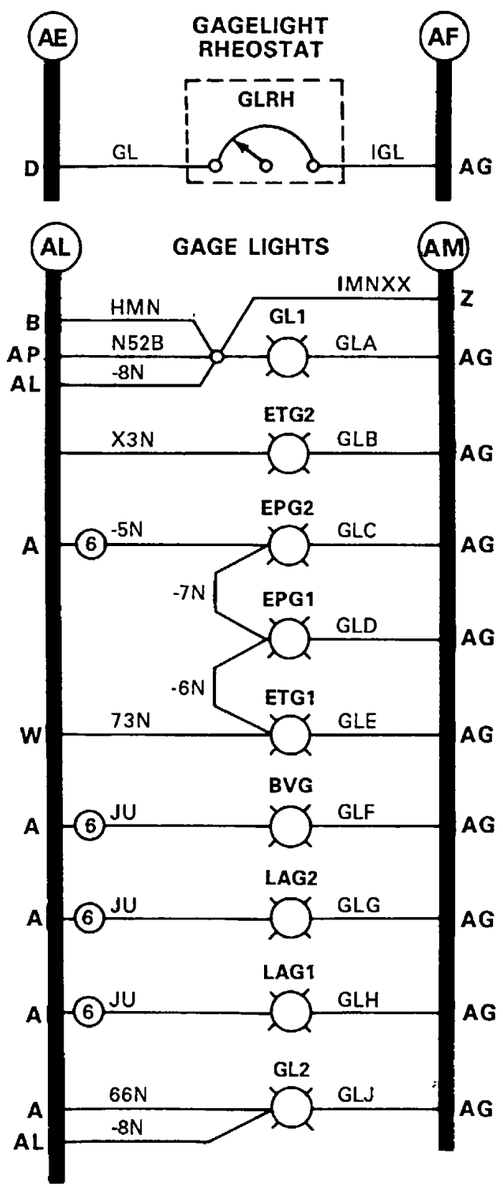

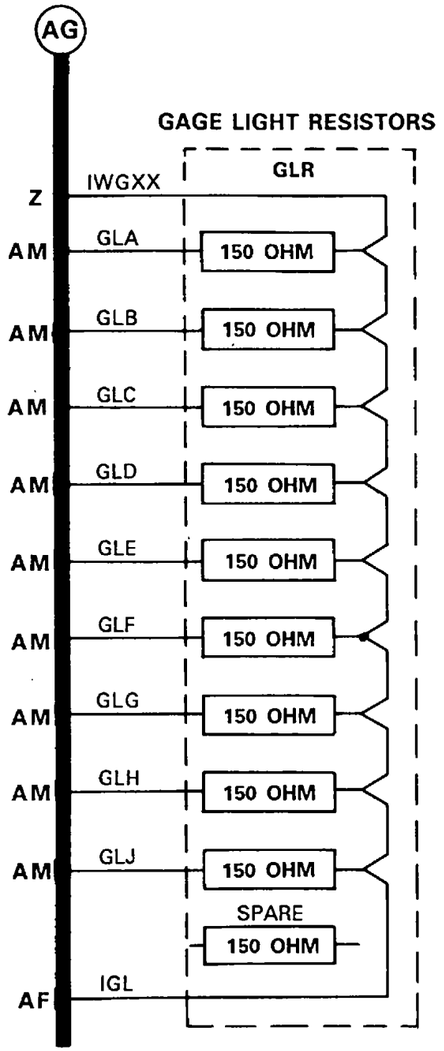

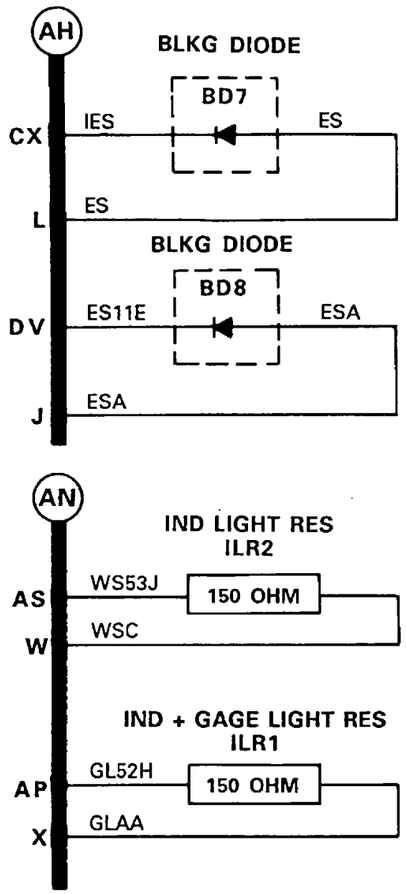

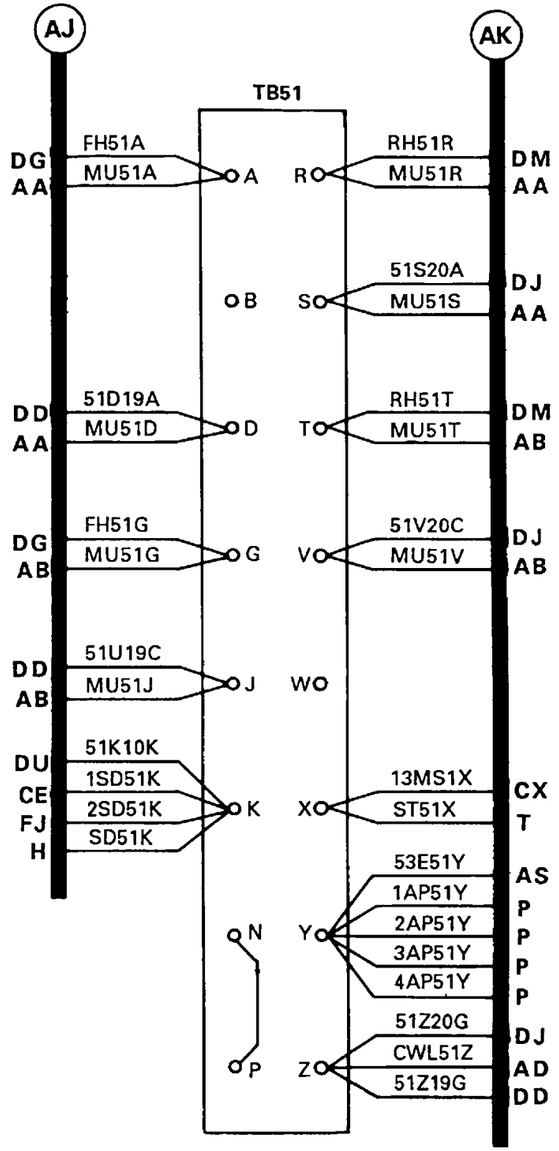

P/O CONTROL CABINET

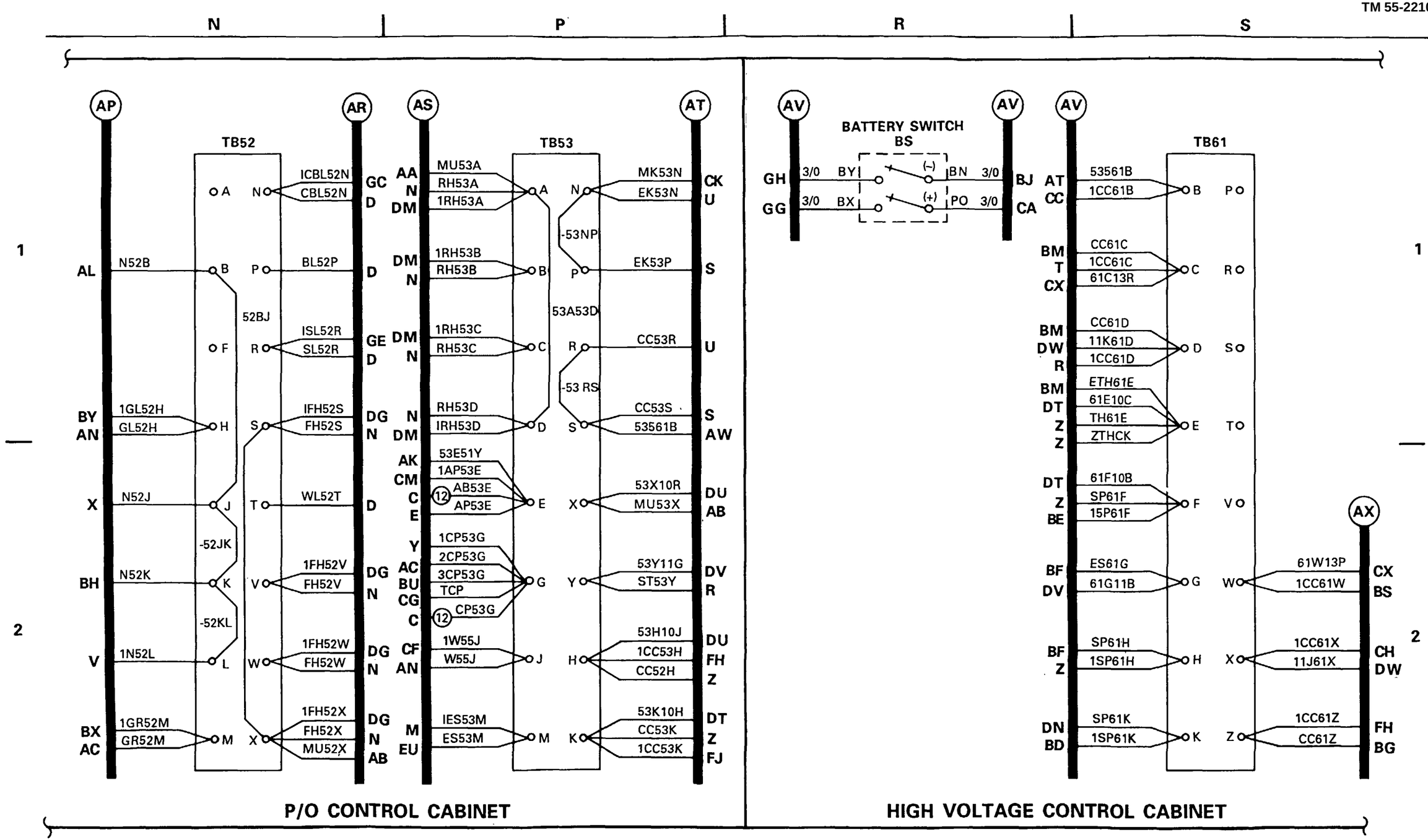
N
P
R
S
1
2
AP
AR
AS
AT
AV
AV
AV
AX
TB52
TB53
TB61
BATTERY SWITCH
BS
AL
BY
AN
X
BH
V
BX
AC
N52B
1GL52H
GL52H
N52J
N52K
1N52L
1GR52M
GR52M
ICBL52N
CBL52N
BL52P
ISL52R
SL52R
IFH52S
FH52S
WL52T
1FH52V
FH52V
1FH52W
FH52W
1FH52X
FH52X
MU52X
52BJ
-52JK
-52KL
MU53A
RH53A
1RH53A
1RH53B
RH53B
1RH53C
RH53C
RH53D
IRH53D
53E51Y
1AP53E
AB53E
AP53E
1CP53G
2CP53G
3CP53G
TCP
CP53G
1W55J
W55J
IES53M
ES53M
-53NP
53A53D
-53 RS
MK53N
EK53N
EK53P
CC53R
CC53S
53561B
53X10R
MU53X
53Y11G
ST53Y
53H10J
1CC53H
CC52H
53K10H
CC53K
1CC53K
GH
GG
3/0
BY
BX
BN
PO
BJ
CA
(-)
(+)
AT
CC
BM
T
CX
BM
DW
R
BM
DT
Z
Z
DT
Z
BE
BF
DV
BF
Z
DN
BD
53561B
1CC61B
CC61C
1CC61C
61C13R
CC61D
11K61D
1CC61D
ETH61E
61E10C
TH61E
ZTHCK
61F10B
SP61F
15P61F
ES61G
61G11B
SP61H
1SP61H
SP61K
1SP61K
61W13P
1CC61W
1CC61X
11J61X
1CC61Z
CC61Z
CX
BS
CH
DW
FH
BG
P/O CONTROL CABINET
HIGH VOLTAGE CONTROL CABINET

T U V W

1

2

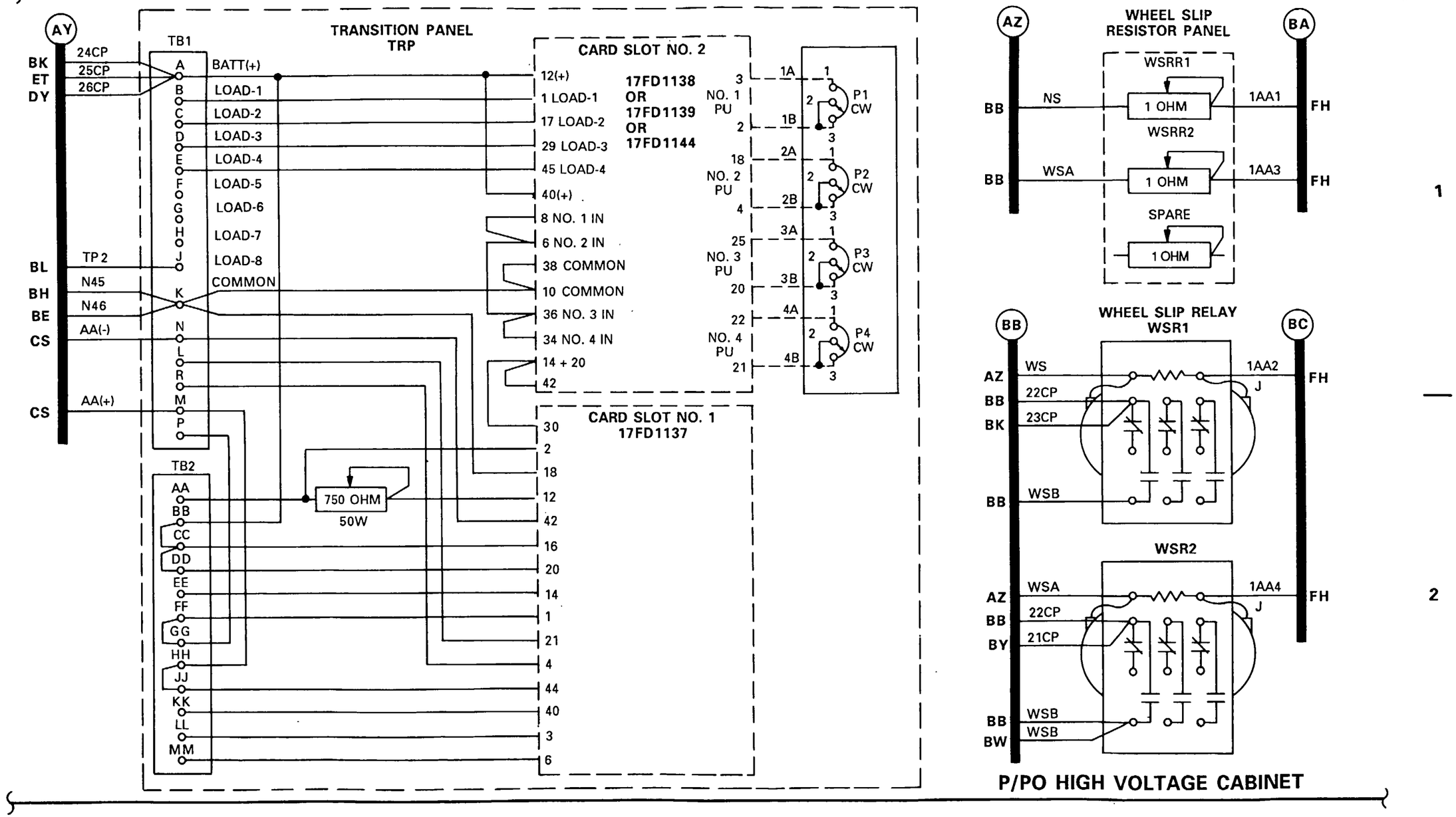
AY
BK ET DY
24CP
25CP
26CP
BL
TP2
BH
N45
BE
N46
CS
AA(-)
CS
AA(+)
TRANSITION PANEL
TRP
TB1
A BATT(+)
B LOAD-1
C LOAD-2
D LOAD-3
E LOAD-4
F LOAD-5
G LOAD-6
H LOAD-7
J LOAD-8
K COMMON
N
L
R
M
P
TB2
AA
BB
CC
DD
EE
FF
GG
HH
JJ
KK
LL
MM
750 OHM
50W
CARD SLOT NO. 2
17FD1138
OR
17FD1139
OR
17FD1144
12(+)
1 LOAD-1
17 LOAD-2
29 LOAD-3
45 LOAD-4
40(+)
8 NO. 1 IN
6 NO. 2 IN
38 COMMON
10 COMMON
36 NO. 3 IN
34 NO. 4 IN
14 + 20
42
NO. 1 PU
NO. 2 PU
NO. 3 PU
NO. 4 PU
1A
1B
2A
2B
3A
3B
4A
4B
P1 CW
P2 CW
P3 CW
P4 CW
CARD SLOT NO. 1
17FD1137
30
2
18
12
42
16
20
14
1
21
4
44
40
3
6
AZ
BB
NS
WSA
WSRR1
1 OHM
WSRR2
1 OHM
SPARE
1 OHM
1AA1
1AA3
FH
BA
WHEEL SLIP
RESISTOR PANEL
WHEEL SLIP RELAY
WSR1
BC
WS
1AA2
22CP
23CP
J
WSB
WSR2
WSA
1AA4
21CP
BY
BW
P/PO HIGH VOLTAGE CABINET

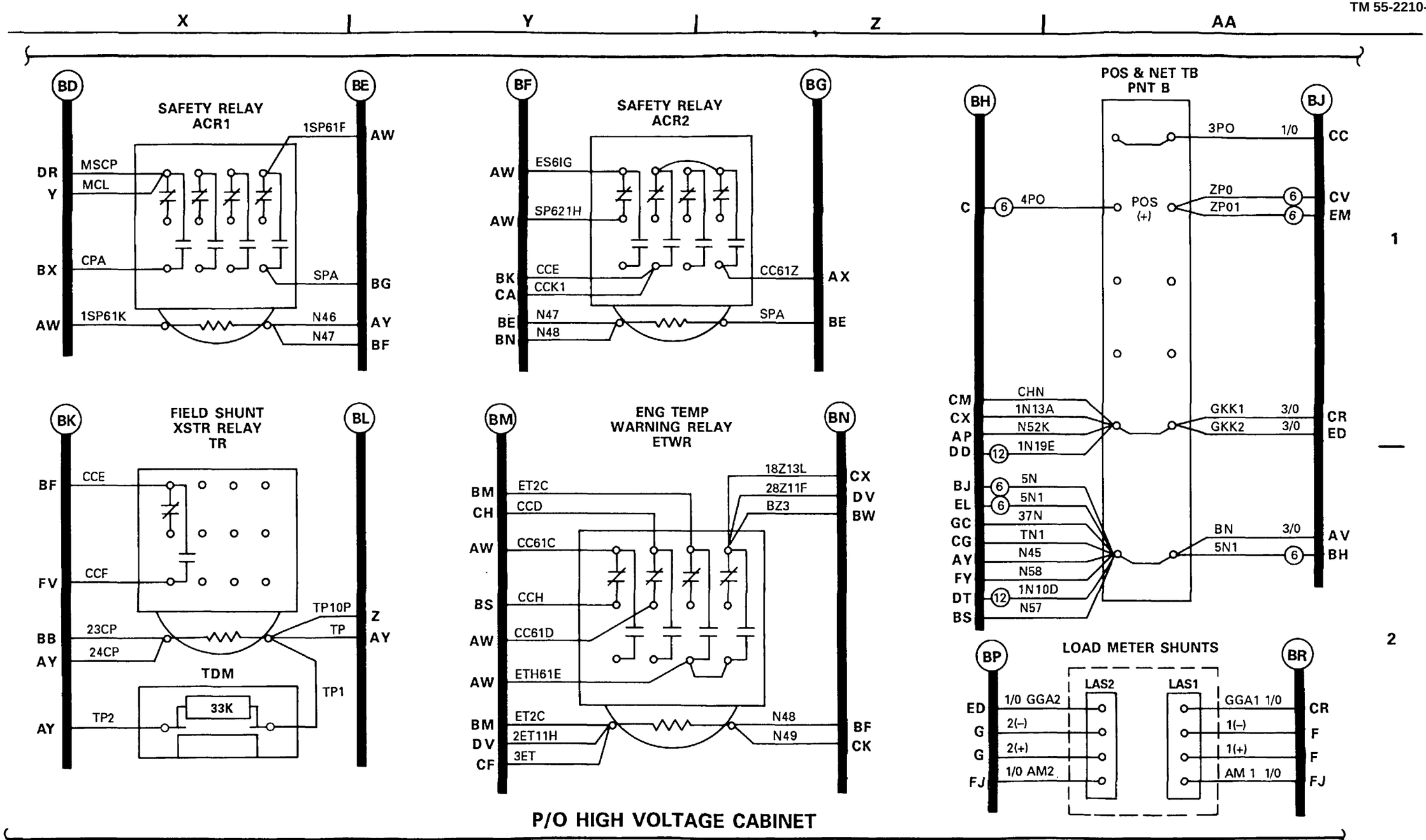

P/O HIGH VOLTAGE CABINET

AB | AC | AD | AE

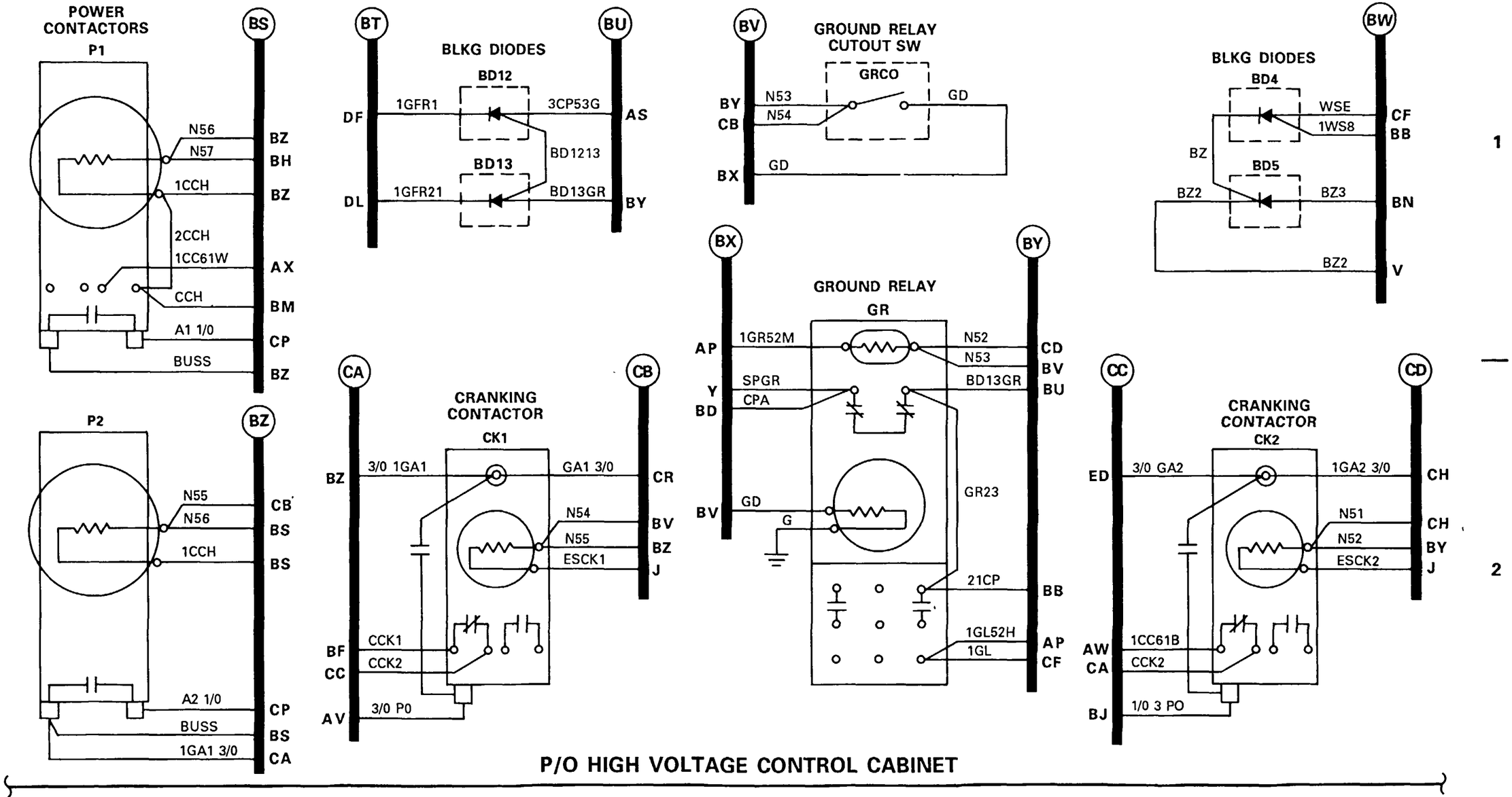

P/O HIGH VOLTAGE CONTROL CABINET

AF | AG | AH | AJ

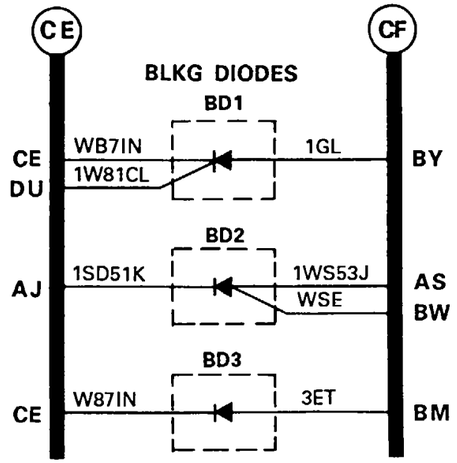

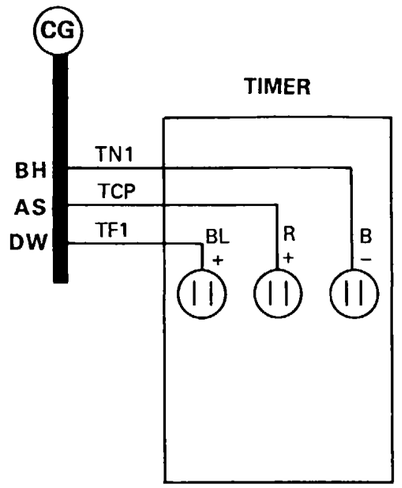

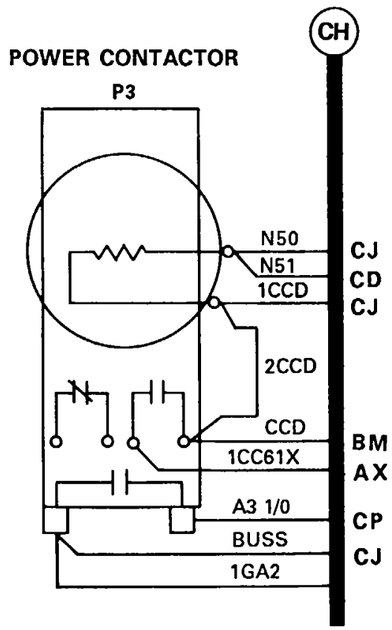

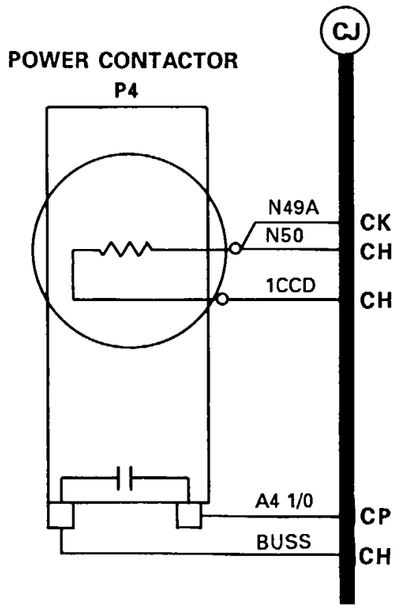

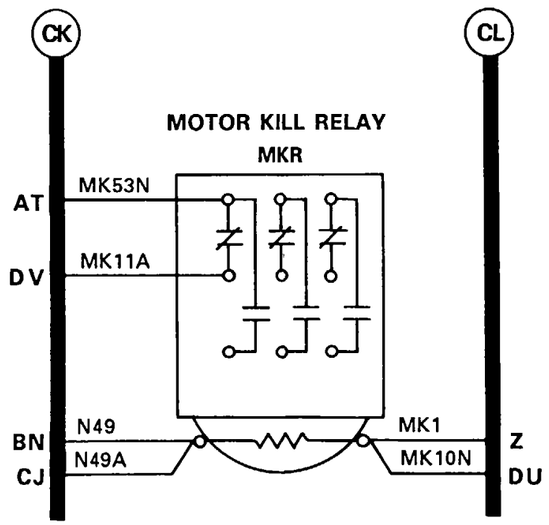

P/O HIGH VOLTAGE CONTROL CABINET

AK | AL | AM | AN

1

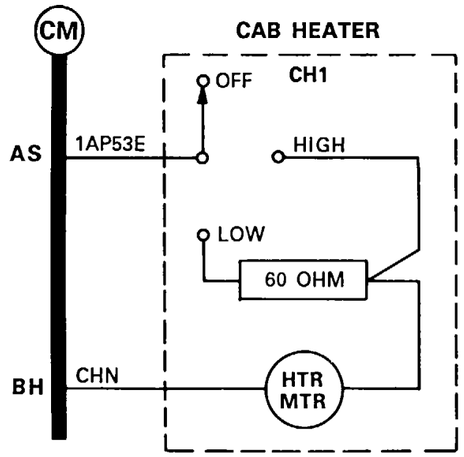

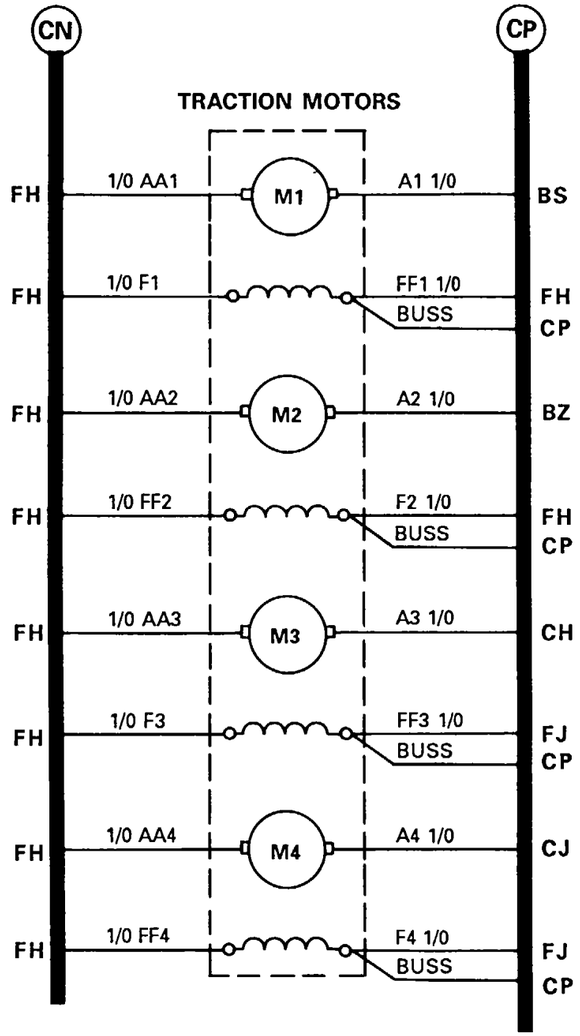

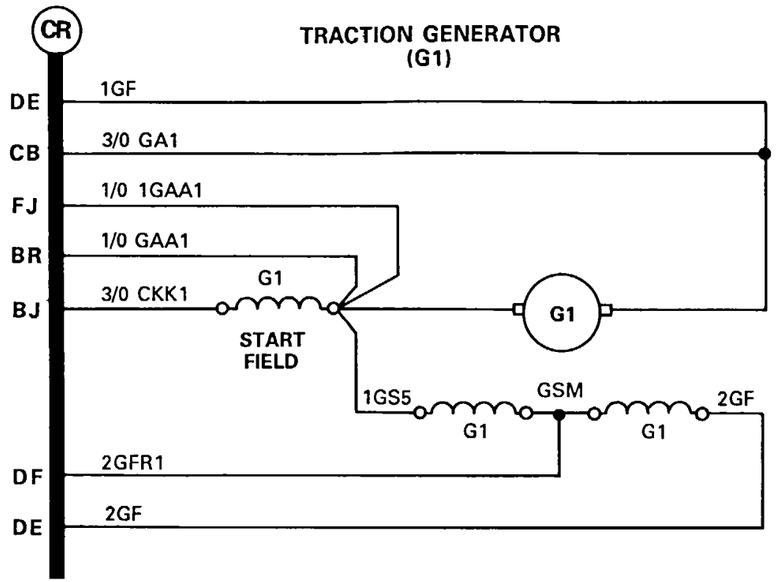

1

2

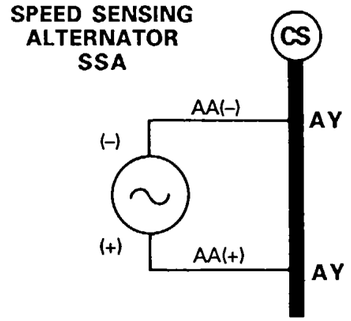

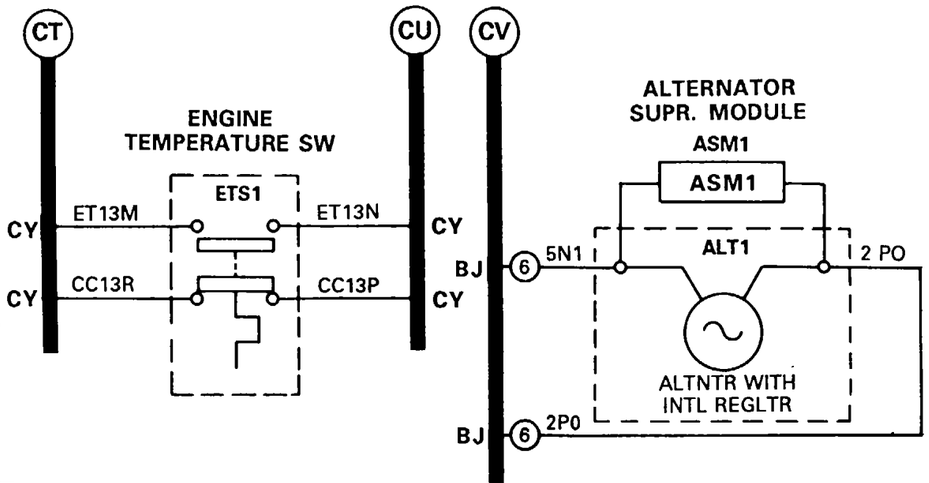

2

NO. 1 ENGINE

AP | AR | AS | AT

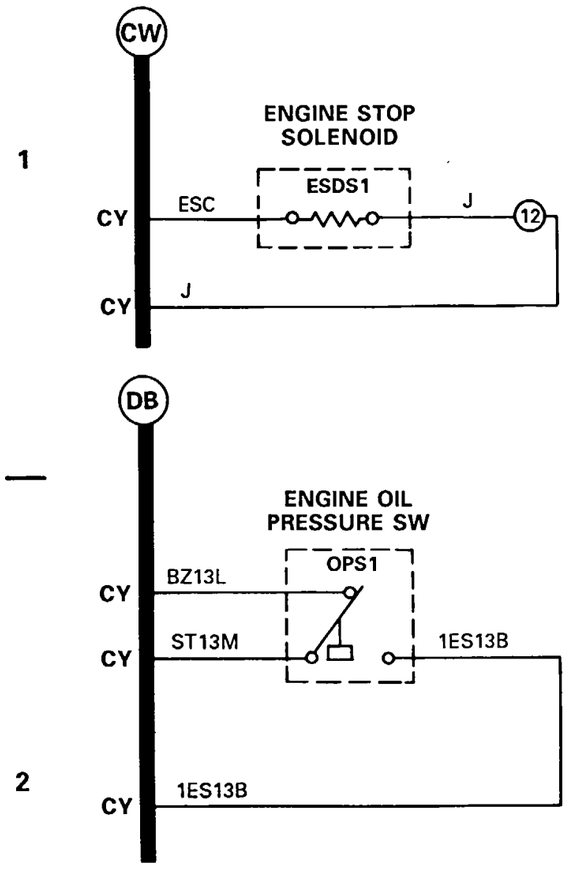

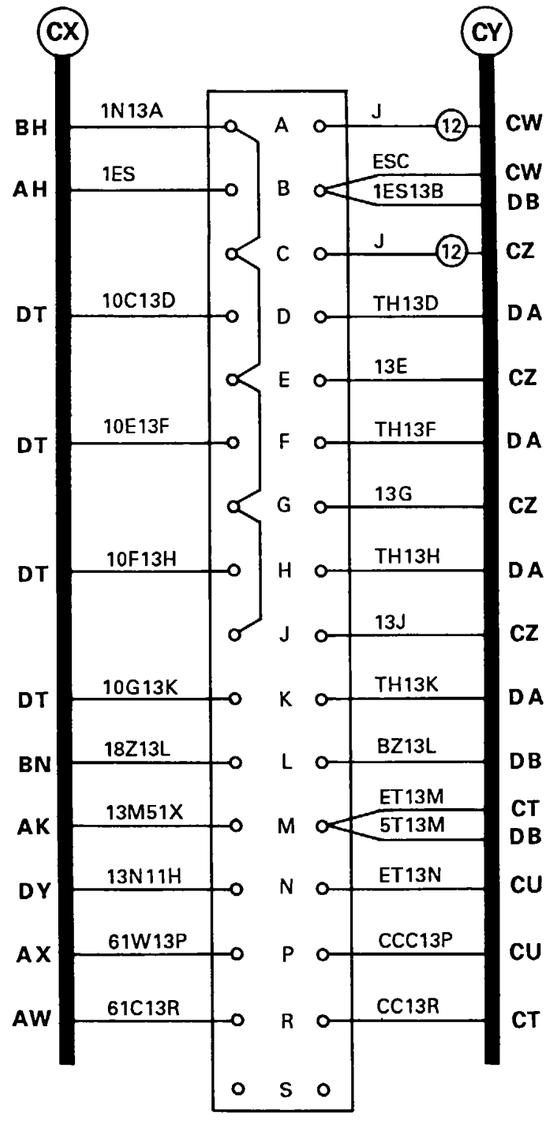

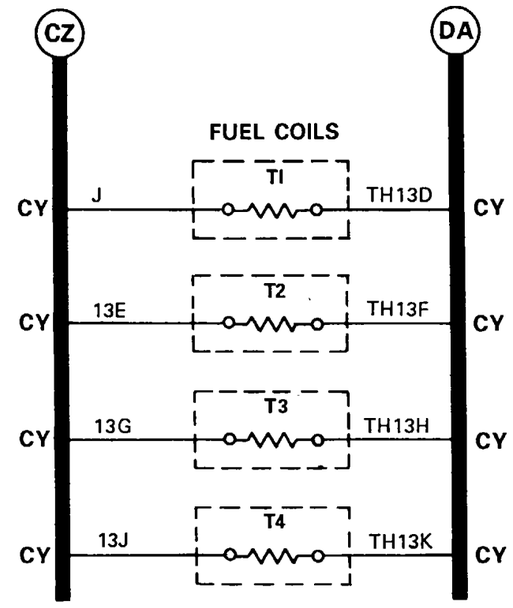

P/O NO. 1 ENGINE

AU | AV | AW | AX

1

2

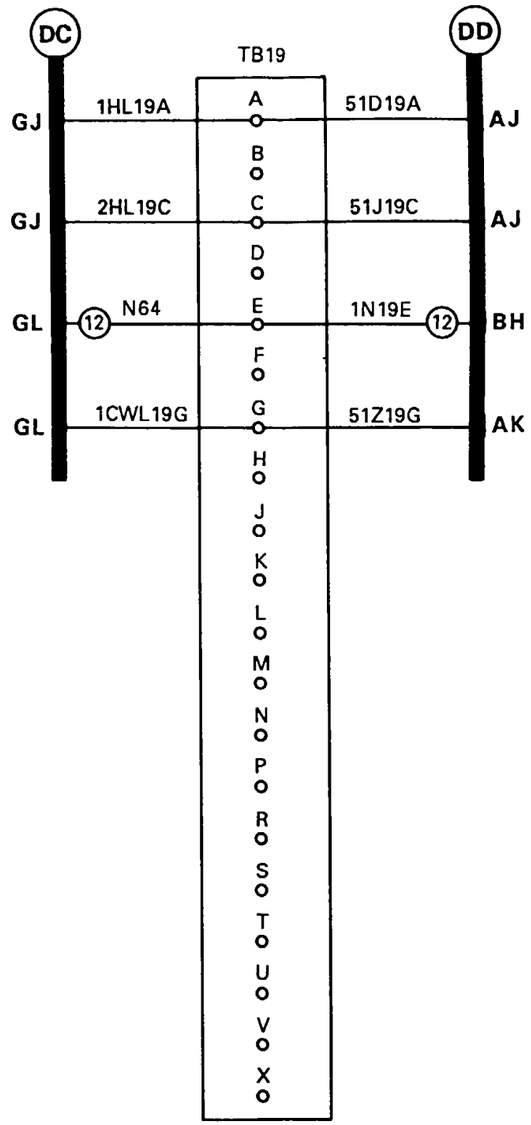

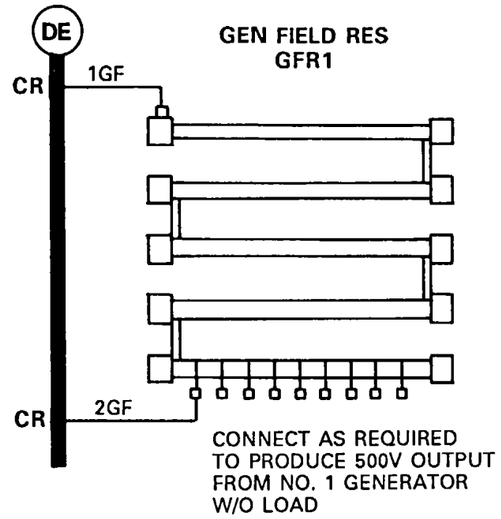

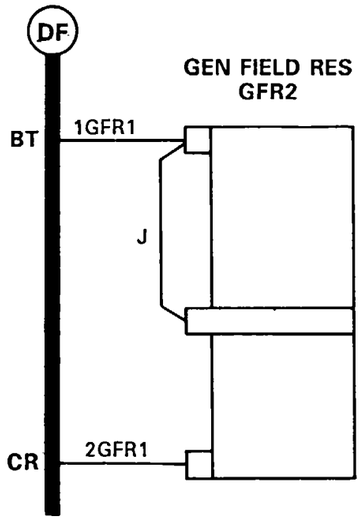

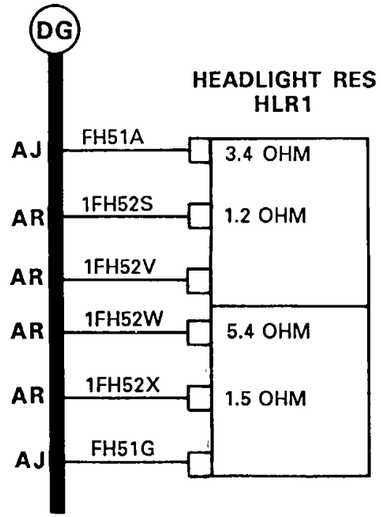

FORWARD FIREWALL

AY | AZ | BA | BB

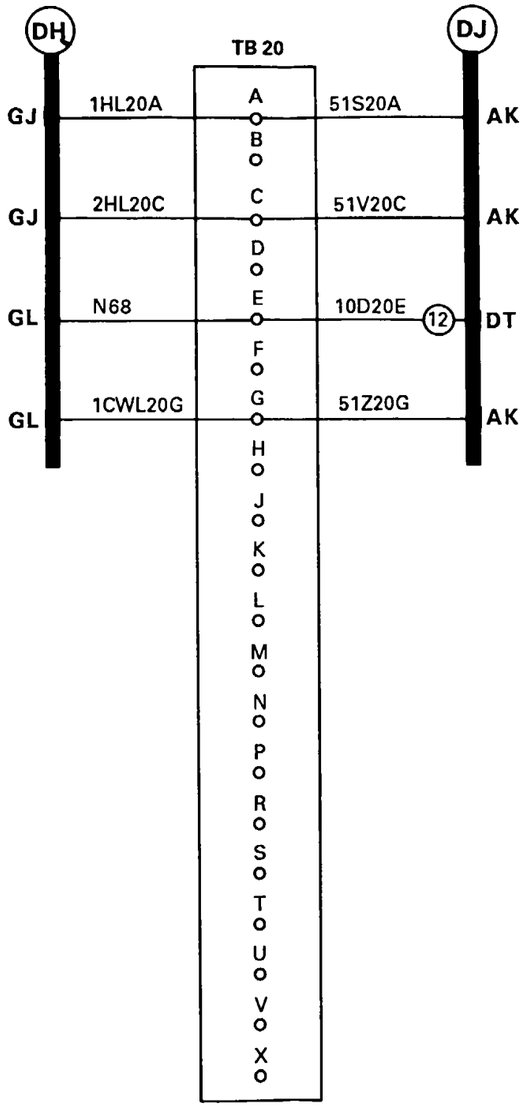

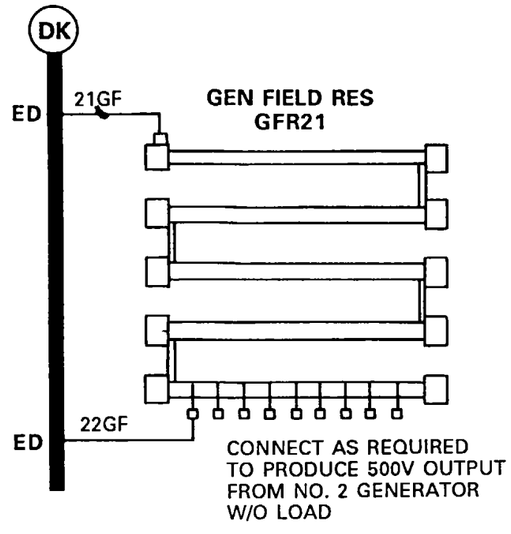

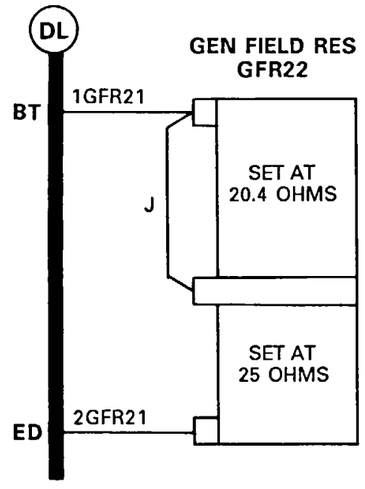

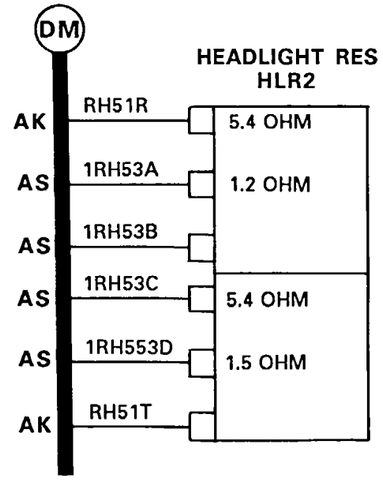

REAR FIREWALL

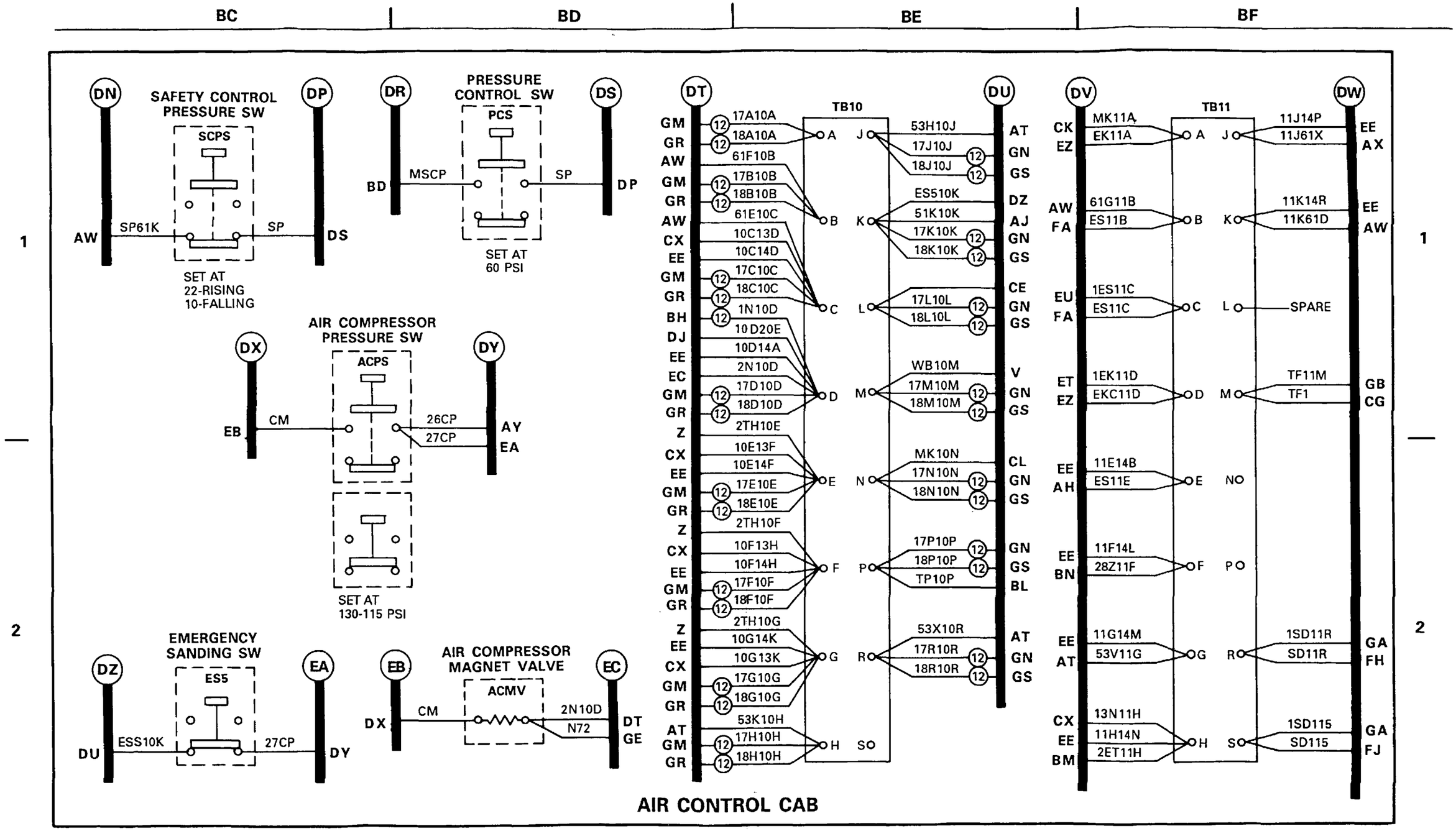
BC
BD
BE
BF
1
2
SAFETY CONTROL PRESSURE SW
SCPS
SET AT 22-RISING 10-FALLING
PRESSURE CONTROL SW
PCS
SET AT 60 PSI
AIR COMPRESSOR PRESSURE SW
ACPS
SET AT 130-115 PSI
EMERGENCY SANDING SW
ES5
AIR COMPRESSOR MAGNET VALVE
ACMV
TB10
TB11
AIR CONTROL CAB

BG | BH | BJ | BK

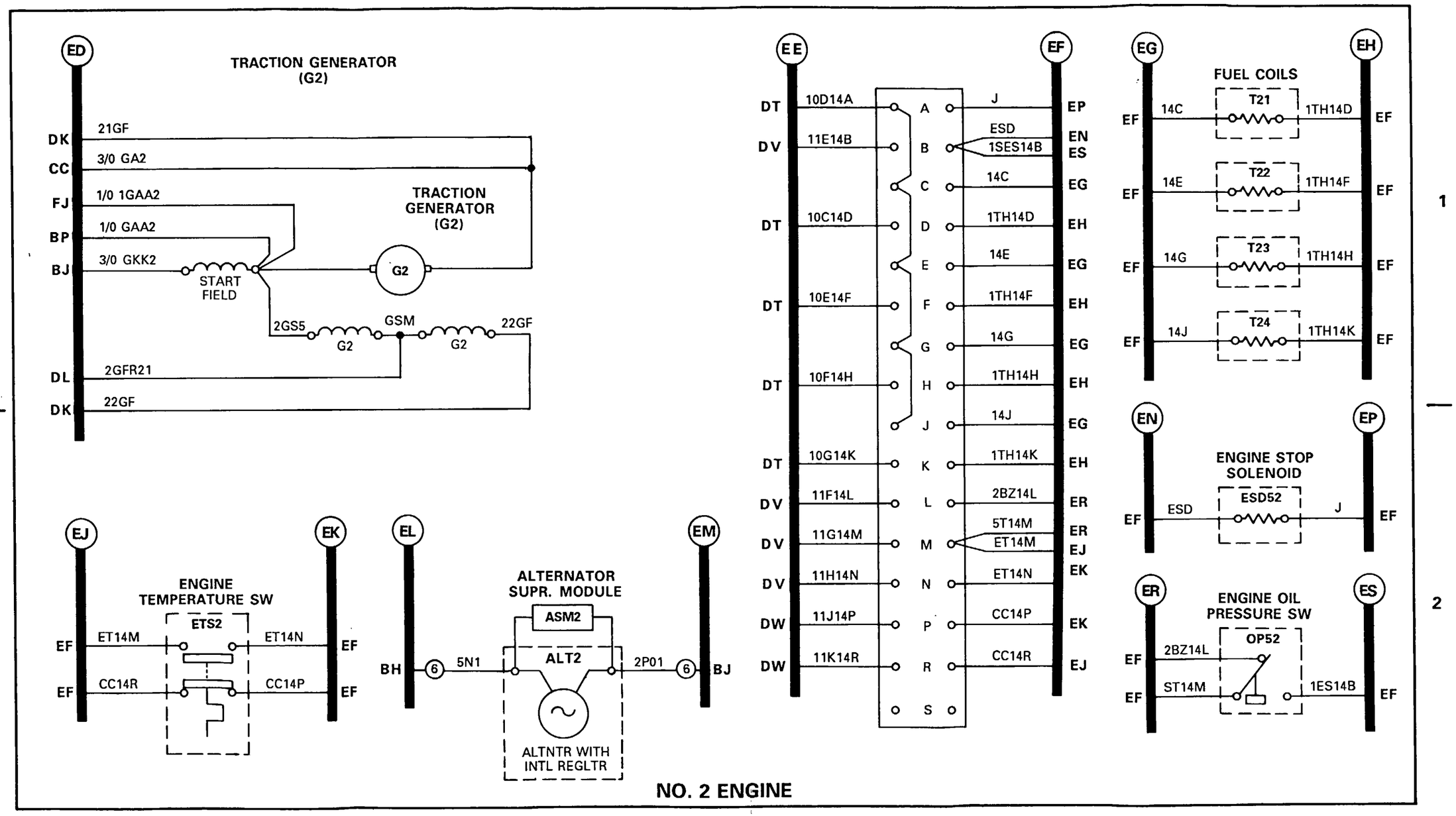
ED
TRACTION GENERATOR (G2)
DK 21GF
CC 3/0 GA2
FJ 1/0 1GAA2
BP 1/0 GAA2
BJ 3/0 GKK2
START FIELD
TRACTION GENERATOR (G2)
G2
2GS5
GSM
22GF
G2
G2
DL 2GFR21
DK 22GF
EE
EF
DT 10D14A
DV 11E14B
DT 10C14D
DT 10E14F
DT 10F14H
DT 10G14K
DV 11F14L
DV 11G14M
DV 11H14N
DW 11J14P
DW 11K14R
A J EP
B ESD 1SES14B EN ES
C 14C EG
D 1TH14D EH
E 14E EG
F 1TH14F EH
G 14G EG
H 1TH14H EH
J 14J EG
K 1TH14K EH
L 2BZ14L ER
M 5T14M ER ET14M EJ
N ET14N EK
P CC14P EK
R CC14R EJ
S
EG
EH
FUEL COILS
EF 14C T21 1TH14D EF
EF 14E T22 1TH14F EF
EF 14G T23 1TH14H EF
EF 14J T24 1TH14K EF
EN
EP
ENGINE STOP SOLENOID
EF ESD ESD52 J EF
ER
ES
ENGINE OIL PRESSURE SW
EF 2BZ14L OP52
EF ST14M 1ES14B EF
EJ
EK
ENGINE TEMPERATURE SW
EF ET14M ETS2 ET14N EF
EF CC14R CC14P EF
EL
EM
ALTERNATOR SUPR. MODULE
BH 6 5N1 ASM2 ALT2 2P01 6 BJ
ALTNTR WITH INTL REGLTR
NO. 2 ENGINE

BL	BM	BN	BP

EMERGENCY FUEL CUT-OFF SWITCHES

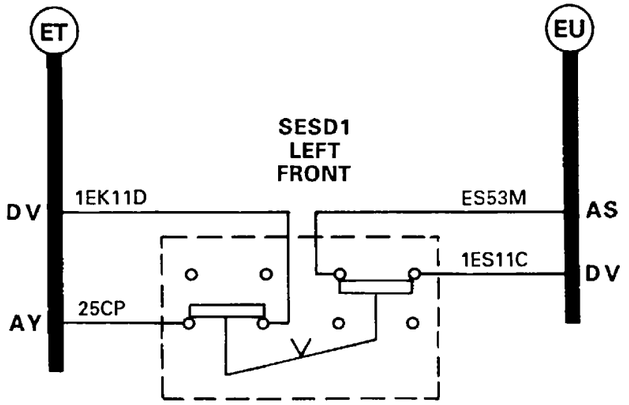

ENGINE HEATER RECEPTACLES

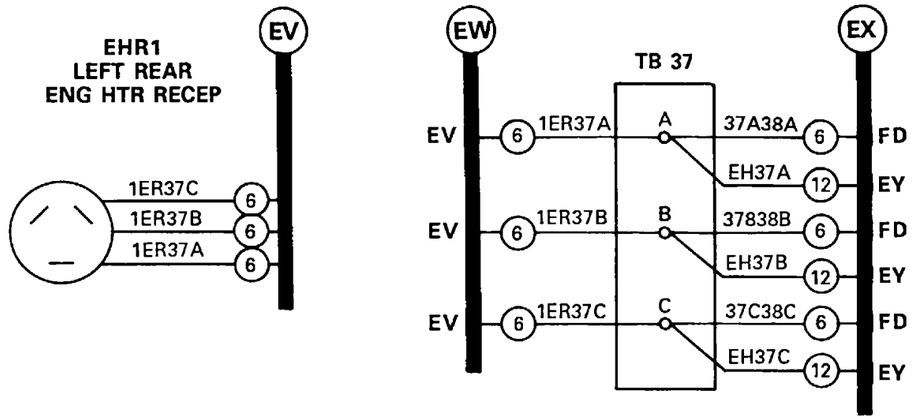

ENGINE HEATERS

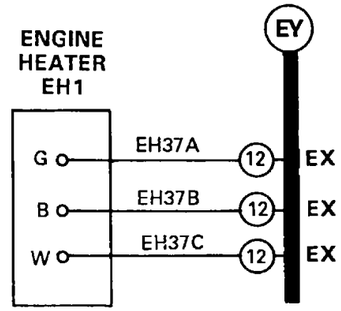

BR | BS | BT | BU

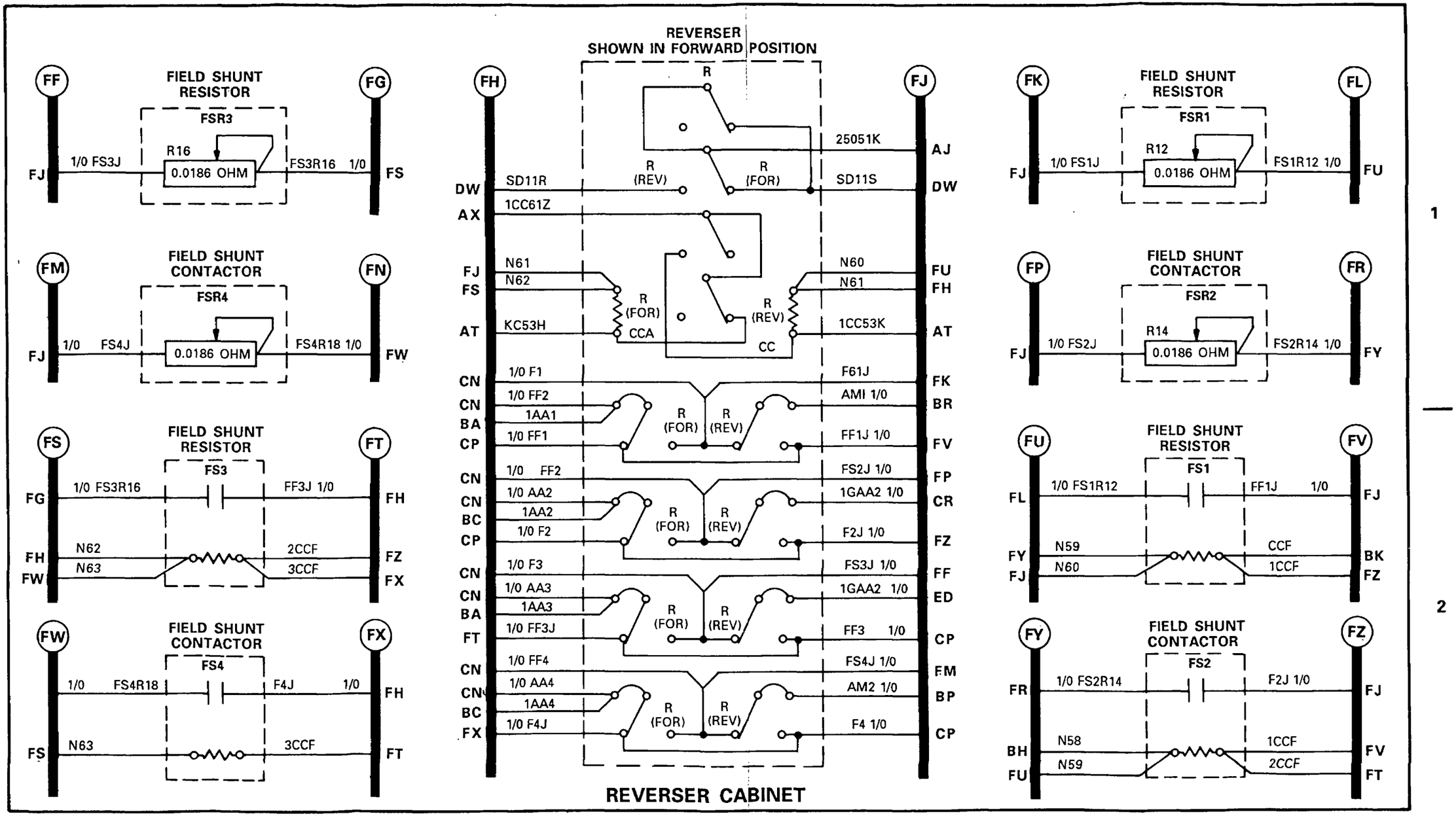

Change 1 G-51/(G-52 blank)

BV | BW | BX | BY

SANDING MAGNET VALVES

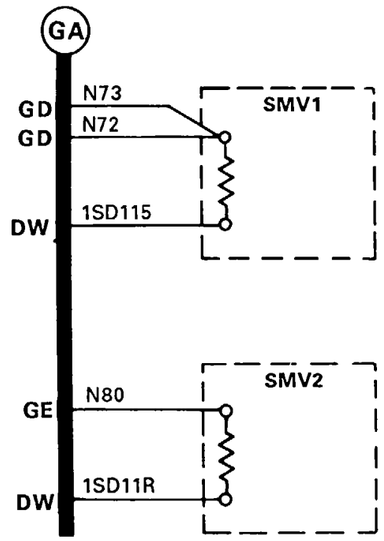

DUMP VALVES

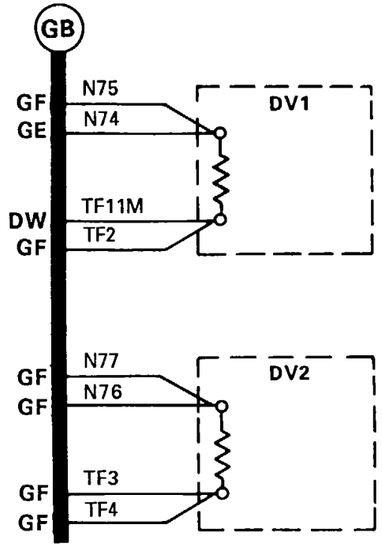

LIGHTS

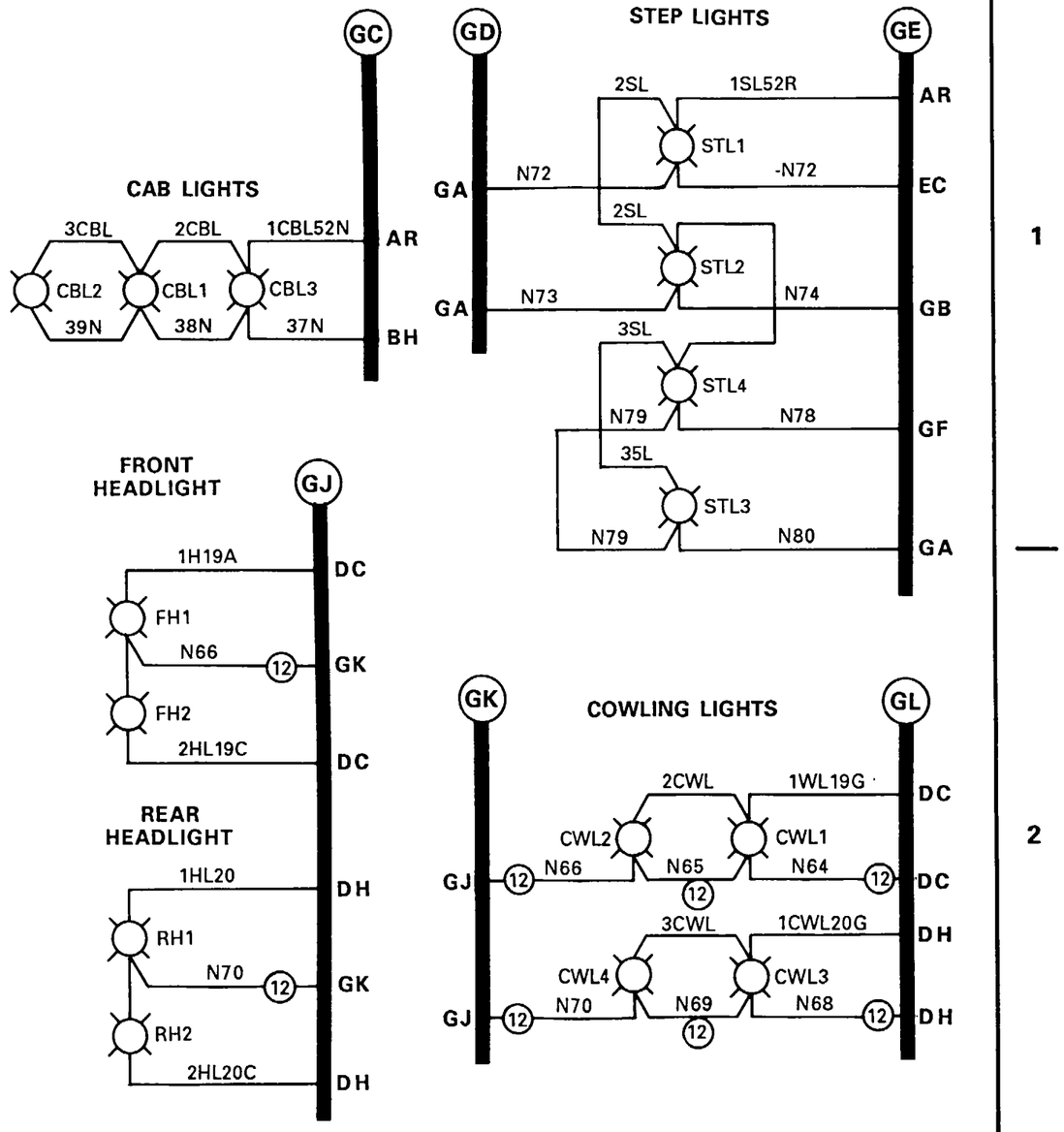

FILTER VALVES

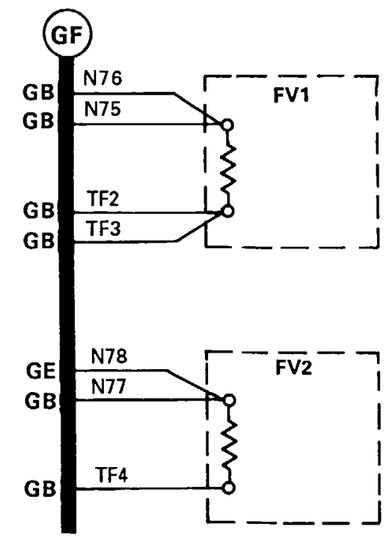

STORAGE BATTERIES

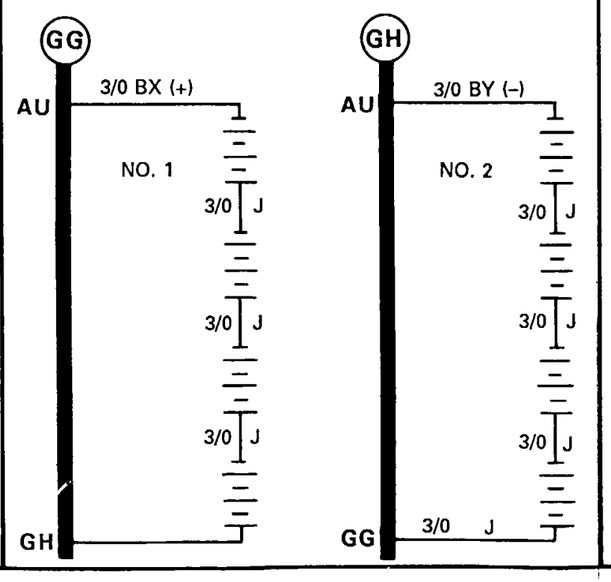

BZ | CA | CB | CC

MULTIPLE UNIT RECEPTACLES

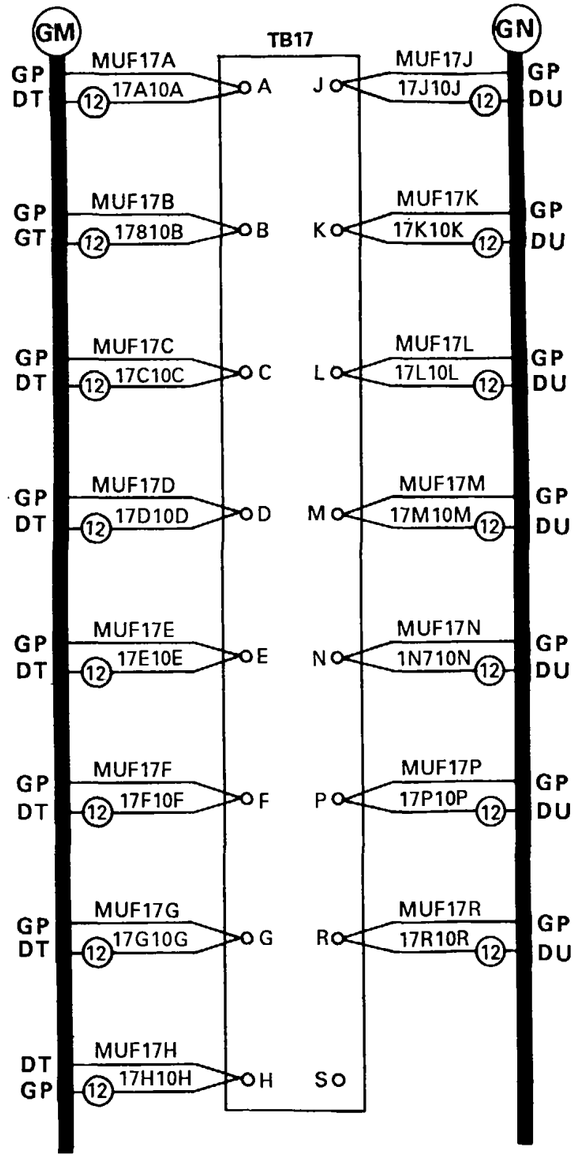

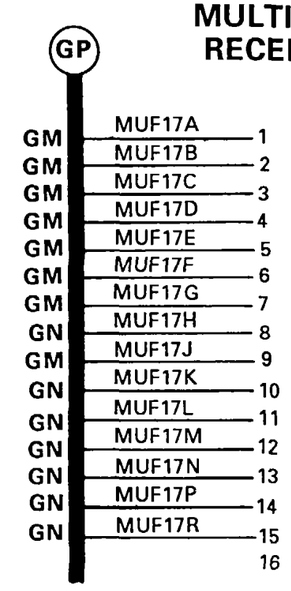

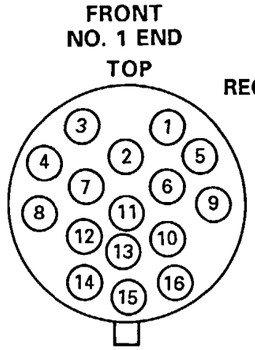

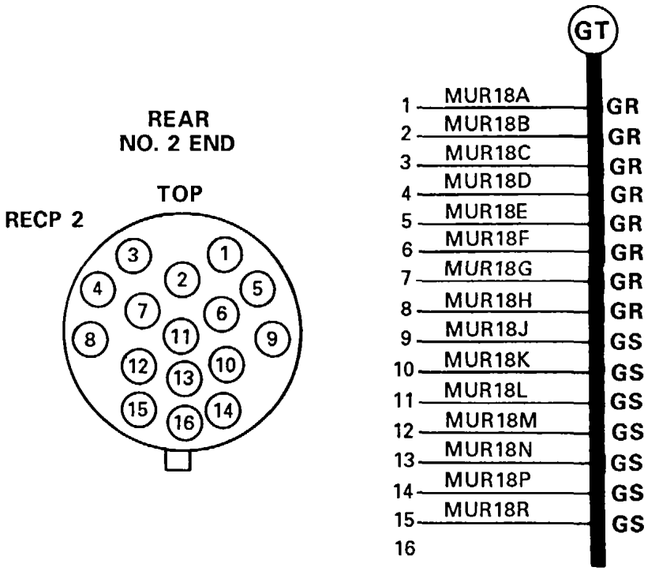

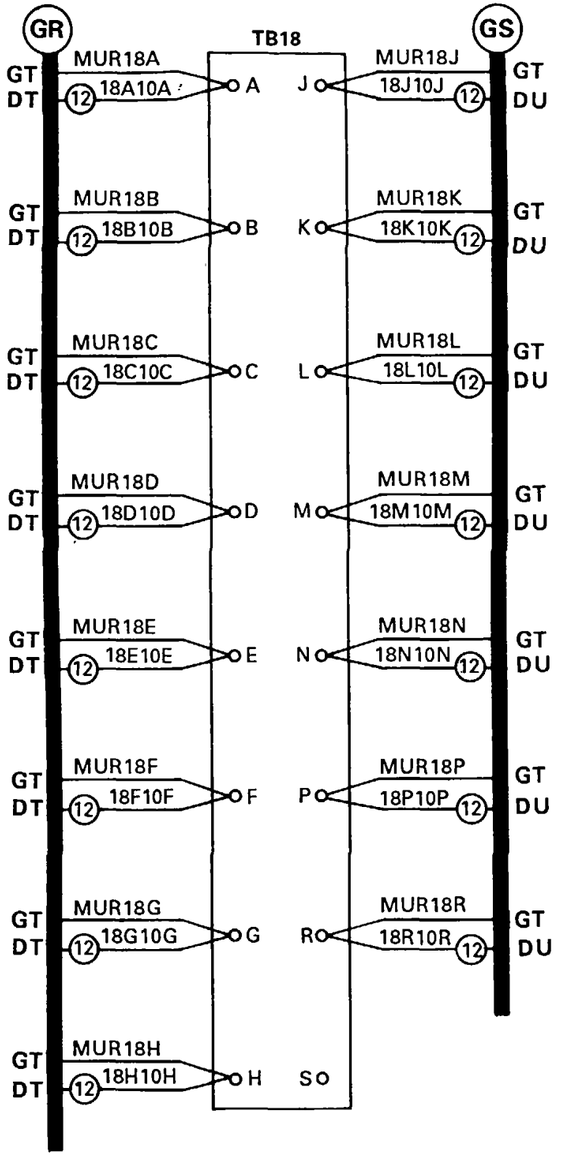

☆U.S. GOVERNMENT PRINTING OFFICE: 1991 554-123/20254

ALPHABETICAL INDEX

Subject, Para

A

Airbrake equipment:
- Automatic brake valve, 2-3, 2-9
- Cutout cocks, 2-3
- Drain valve, 2-3
- Emergency brake valve, 2-3, 2-9
- Independent brake valve, 2-3, 2-9
- Sanding valve, 2-3

Air compressor:
- Air cleaner intake, 4-42
- Belts, 4-41
- Location and description, 1-9
- Tabulated data, 1-10

Air pressure gages, 2-13
Air tank main reservoir, 1-9
Armrest, 4-14
Automatic brake valve, 2-9

B

Basic issue items, App C
Battery charging alternator:
- Location and description, 1-9
- Technical principles of operation, 1-12
- Maintenance, belts, 4-34

Battery voltmeter gage, 2-3
Battery compartment, 1-9
Battery instructions:
- Adding water, 4-30
- Bolted connection, 4-30
- Compartment location and description, 1-9
- Cleaning instructions, 4-30
- Hydrometer readings, 4-30
- Maintenance, 4-30
- Weekly inspection, 4-6

Battery switch, 1-14, 2-3
Bell ringer valve, 2-3
Belt adjustment:
- Air compressor, 4-41
- Cooling fan, 4-39

Belt replacement:
- Air compressor, 4-41
- Cooling fan, 4-39

Brake adjustment, 4-45
Brakehead replacement, 4-45
Brakeshoe replacement, 4-45

Subject, Para

B (cont)

Brake test:
- Brake pipe leakage test, 2-13
- Emergency test, 2-13
- Train airbrake terminal test, 2-13

Brake, hand:
- Description, 2-3
- Location, 2-3
- Maintenance, 4-43

Braking:
- Emergency stop, 2-28
- Operating automatic brake, 2-9
- Operating independent brake, 2-9
- Stopping light locomotive, 2-15

C

Cab door and lock, 4-17
Cab heater assembly, 4-24
Change direction with light locomotive, 2-16
Common tools and equipment, 4-1
Compressor, air (see air compressor)
Control equipment, electrical:
- Master controller, 2-3
- Reverser, 2-3
- Throttle, 2-3

Controller mechanism, 2-3
Controller, master, 2-3
Cooling fan belts, 4-39
Cooling system:
- Hoses and clamps, 4-38
- Servicing, 4-6, 4-38

Coupling to train and pumping up air, 2-18
Crossovers, running over railroad, 2-25
Cutoff pilot valve, 2-9
Cutting off locomotive with or without cars, 2-20
Cutting out traction motor, 2-39

D

Daily inspection worksheet, 1-5
Data plates, 1-10
Destruction of army material to prevent enemy use, 1-3

ALPHABETICAL INDEX

Subject, Para

D (cont)

Diesel engine:
- Controls, 2-3
- Emergency stop, 2-17
- Location and description, 1-9
- Operation in extreme cold, 2-32
- Operator controls and indicators, 2-3
- Stopping, 2-17

E

Electrical equipment cabinet door, 4-19
Electrical equipment cabinet:
- Location and description, 1-9

Electrical equipment, 2-3
Emergency application of brakes from train, 2-25
Emergency brake valve, 2-9
Emergency shutdown switch, 2-3, 2-17
Emergency stop, train, 2-28
Engine cranking contactor, 1-12
Engine block heater clamps and hoses, 4-40
Engine, diesel (see diesel engine)
Engine hood door, 4-11
Engine oil pressure gage, 2-3
Engine radiator:
- Location and description, 1-9

Engine system warning buzzer, 4-22
Engine temperature gage, 2-3
Engine temperature warning relay (ETWR), 1-14
Equipment characteristics, capabilities, and features, 1-8
Equipment data:
- Data plates, 1-10
- Tabulated data, 1-10

Exhaust muffler and extension pipe, 4-36

F

Fire extinguisher, operation of, 2-30
Forms, records, and reports, maintenance, 1-2
Forward relay (FOR), 1-12
Foundation brakeshoe and brakehead, 4-45
Fuel system lines and fittings, 4-37
Fuel tank, 1-9

Subject, Para

G

Gages:
- Battery voltmeter, 2-3
- Engine oil pressure, 2-3
- Engine temperature, 2-3
- Load meter, 2-3
- Service meter, 2-3

Generating equipment and control devices:
- Battery charging alternators, 1-12
- Engine cranking contactors, 1-12
- Main generators, 1-12

Generator shunt, 1-12
Ground relay action, 2-24
Ground relay (GR), 1-14
Ground relay cutout switch (GRCO), 1-14

H

Handbrake, 4-43
Handrail, upright, cutter lever, and step, 4-12
Headlamp, 4-32
Heater lines, hoses, and fittings, 4-25
Horn assembly, 4-23

I

Independent brake valve, 2-9
Inspection, battery, 4-6
Introduction to unit preventive maintenance checks and services, 4-6

L

Lights:
- Headlamp, 4-32
- Step, cowling, gage, and cab and electrical equipment cabinet, 4-33

Load meter, 2-3
Location and description of major components:
- Battery charging alternators, 1-9
- Battery compartment, 1-9
- Diesel engine, 1-9
- Electrical equipment cabinet, 1-9
- Engine radiators, 1-9

ALPHABETICAL INDEX

Subject, Para

L (cont)

Fuel tank, 1-9
Main generators, 1-9
Main reservoir air tanks, 1-9
Master controller, 1-9
Sandbox and sand controllers, 1-9
Tailpipe housing, 1-9
Traction motors, 1-9
Location and use of controls and indicators, 2-2
Lubrication, instructions, 3-1

M

Main generator:
Brushes, 4-35
Location and description, 1-9
Tabulated data, 1-10
Technical principles of operation, 1-12
Main reservoir air tank, 1-9
Maintenance forms, records, and reports, 1-2
Marking for shipment, 4-49
Master controller:
Location and description, 1-9
Location and use, 2-3
Miscellaneous controls, 2-3
Miscellaneous control devices:
Battery switch, 1-14
Engine temperature warning relay (ETWR), 1-14
Ground relay (GR), 1-14
Ground relay cutout switch (GRCO), 1-14
Motor kill relay, 1-14
Safety relays, 1-14
Timer, 1-14
Transition relay panel, 1-14
Monthly service, 4-6
Motors, electrical:
Cab heater, 4-24
Traction, 1-9
Moving light locomotive, 2-14
Multiple-unit control jumper, 4-31
Multiple-unit engine system warning bell, 4-21
Multiple-unit operation, 2-29

Subject, Para

O

Operator Controls and Indicators, 2-3
Operator/crew maintenance, 3-3
Operator troubleshooting procedures:
Introduction, 3-2
Symptom index:
Air compressor, 3-2
Brake system, 3-2
Electrical instruments and controls, 3-2
Engine, 3-2
Operation of fire extinguisher, 2-30
Operation under unusual conditions:
At high altitude, 2-36
Cutting out traction motors, 2-39
In dusty or sandy areas, 2-33
In extreme cold, 2-32
In extreme heat, 2-31
In rainy or humid conditions, 2-34
In saltwater areas, 2-35
Rerailing, 2-38
Running through water, 2-37
Towing locomotive dead, 2-40
Operation under usual conditions:
Brake system, 2-9
Braking with power, 2-27
Changing direction with light locomotive, 2-16
Coupling to train and pumping up air, 2-18
Cutting off locomotive with or without cars, 2-20
Emergency application of brakes, 2-26
Emergency stop, train, 2-28
Ground relay action, 2-24
Load limits, 2-23
Moving light locomotive, 2-14
Multiple unit operation, 2-29
Precautions before moving locomotive, 2-12
Preoperation air brake test, 2-13
Prestart instructions, 2-10
Running over railroad crossovers, 2-25
Safety warning bell assembly, 4-19
Starting engine, 2-11
Starting train, 2-21
Stopping engine, 2-17
Stopping light locomotive, 2-15

ALPHABETICAL INDEX

Subject, Para

P

Operation under usual conditions: (cont)
Uncoupling procedures, 2-19
Wheel slipping, 2-22
Power contactors, 1-13
Precautions before moving locomotive, 2-12
Preoperational airbrake tests, 2-13
Preparation for storage or shipment, 1-4
Prestart instructions, 2-10
Preventive maintenance checks and services, operator/crew, 2-4
Preventive maintenance checks and services, unit maintenance, 4-6

Q

Quality assurance/quality control (QA/QC), 1-5

R

Radiator, engine:
Location and description, 1-9
Radio interference suppression, 4-5
Receptacle, engine room convenience, 4-31
Repair parts, 4-3
Reporting equipment improvement recommendations (EIR), 1-6
Reservoir, main air tank, 1-9
Reverser, 1-13, 2-3
Running over railroad crossovers, 2-25

S

Safety, care, and handling, 1-11
Safety relay, 1-14
Safety warning bell assembly, 4-20
Sandbox:
Location and description, 1-9
Sandbox fill, 1-9
Sand controller, 1-9, 4-26
Sander control valve, 4-27
Sander hose assembly, 4-28
Scope:
Model number and name, 1-1
Purpose of equipment, 1-1
Type of manual, 1-1
Seat and cushion, 4-13

Subject, Para

S (cont)

Service meter, 2-3
Service upon receipt:
General, 4-4
Shipping instructions, 4-48
Side Compartment Door, 4-18
Special unit maintenance tools and equipment, 4-2
Special tools, TMDE, and support equipment, 4-2
Starting engine, 2-11
Starting train, 2-21
Step, cowling, gage, and cab and electrical cabinet lights and wiring, 4-33
Stopping:
Engine, 2-17
Light locomotive, 2-15
Storage batteries, connections, and battery compartment, 4-30
Storage instructions, 4-47
Switches, circuit breakers, indicating lights, 4-29

T

Tabulated data, 1-10
Tailpipe housing:
Location and description, 1-9
Timer relay, 1-14
Traction motor:
Brushes and brush holders, 4-46
Location and description, 1-9
Tabulated data, 1-10
Technical principles of operation, 1-13
Traction motors location and description, 1-9
Traction motors and switches devices:
Power contactors, 1-13
Reverser, 1-13
Traction motors, 1-13
Wheel slip relays, 1-13
Trainline air hoses and fittings, 4-44
Trainline hookup and cutter lever, 2-3
Transition relay panel, 1-14
Troubleshooting, operator, 3-2
Troubleshooting, unit maintenance, 4-7

ALPHABETICAL INDEX

Subject, Para

U

Uncoupling procedures, 2-19
Unit maintenance procedures:
  General, 4-9
Unit troubleshooting:
  General, 4-7
  Troubleshooting procedures, 4-8
  Symptom index:
  Auxiliary electrical system, 4-8
  Cooling system, 4-8
  Electrical instruments and controls, 4-8
  Engine, 4-8
  Lubricating system, 4-8
  Main generator, 4-8
  Sanding system, 4-8
  Lights, 4-8

V

Valves:
  Automatic brake, 2-3, 2-9
  Bellringer, 2-3
  Cutoff pilot, 2-3, 2-9
  Emergency brake, 2-3

Subject, Para

V (cont)

  Horn, 2-3
  Independent brake, 2-3, 2-9
  Regulating, 2-3
  Sanding, 2-3

W

Warranty information, 1-7
Wheel slipping, 2-22
Wheel slip relay, 1-13
Window glass and sash, 4-16
Windshield wiper motor, blade, and arm, 4-15
Wiring:
  Step, cowling, gage, and cab and electrical equipment cabinet lights, 4-33

By Order of the Secretary of the Army:

JOHN A. WICKHAM, JR.
General, United States Army
Chief of Staff

Official:

R. L. DILWORTH
Brigadier General, United States Army
The Adjutant General

DISTRIBUTION:
To be distributed in accordance with DA Form 12-25A, Operator and Unit Maintenance Requirements for Locomotive, 80-Ton Model 112-5708.

☆U.S. GOVERNMENT PRINTING OFFICE: 1987 754-122/40157

RECOMMENDED CHANGES TO EQUIPMENT TECHNICAL PUBLICATIONS

THEN...JOT DOWN THE DOPE ABOUT IT ON THIS FORM. CAREFULLY TEAR IT OUT, FOLD IT AND DROP IT IN THE MAIL.

SOMETHING WRONG WITH PUBLICATION

FROM: (PRINT YOUR UNIT'S COMPLETE ADDRESS)

DATE SENT

PUBLICATION NUMBER	PUBLICATION DATE	PUBLICATION TITLE

BE EXACT PIN-POINT WHERE IT IS

PAGE NO.	PARA-GRAPH	FIGURE NO.	TABLE NO.

IN THIS SPACE, TELL WHAT IS WRONG AND WHAT SHOULD BE DONE ABOUT IT.

PRINTED NAME, GRADE OR TITLE AND TELEPHONE NUMBER	SIGN HERE

TEAR ALONG PERFORATED LINE

DA FORM 1 JUL 79 2028-2

PREVIOUS EDITIONS ARE OBSOLETE.

P.S.--IF YOUR OUTFIT WANTS TO KNOW ABOUT YOUR RECOMMENDATION MAKE A CARBON COPY OF THIS AND GIVE IT TO YOUR HEADQUARTERS.

THE METRIC SYSTEM AND EQUIVALENTS

Linear Measure

1 centimeter = 10 millimeters = .39 inch
1 decimeter = 10 centimeters = 3.94 inches
1 meter = 10 decimeters = 39.37 inches
1 dekameter = 10 meters = 32.8 feet
1 hectometer = 10 dekameters = 328.08 feet
1 kilometer = 10 hectometers = 3.2808.8 feet

Weights

1 centigram = 10 milligrams = .15 grain
1 decigram = 10 centigrams = 1.54 grains
1 gram = 10 decigram = .035 ounce
1 dekagram = 10 grams = .35 ounce
1 hectogram = 10 dekagrams = 3.52 ounces
1 kilogram = 10 hectograms = 2.2 pounds
1 quintal = 100 kilograms = 220.46 pounds
1 metric ton = 10 quintals = 1.1 short tons

Cubic Measure

1 cu. centimeter = 1000 cu. millimeters = .06 cu. inch
1 cu. decimeter = 1000 cu. centimeters = 61.02 cu in.
1 cu. meter = 1000 cu. decimeters = 35.31 cu. feet

Square measure

1 sq. centimeter = 100 sq. millimeters = .155 sq. in.
1 sq. decimeter = 100 sq. centimeters = 15.5 inches
1 sq. meter (centare) = 100 sq. decimeters = 10.76 feet
1 sq. dekameter (are) = 100 sq. meters = 1.076.4 sq. ft.
1 sq. hectometer (hectare) = 100 sq. dekameters = 2.47 acres
1 sq. kilometer = 100 hectometers = .386 sq. miles

Liquid Measure

1 dekaliter = 10 liters = 2.64 gallons
1 hectoliter = 10 dekaliters = 26.42 gallons
1 kiloliter = 10 hectoliters = 264.18 gallons
1 liter = 10 deciliters = 33.81 fl. ounces
1 centiliter = 10 milliliters = .34 fl. ounce
1 deciliter = 10 centiliters = 3 38 fl. ounces
1 metric ton = 10 quintals = 1.1 short tons

Approximate Conversion Factors

To change	To	Multiply by
inches	centimeters	2.540
feet	meters	.305
yards	meters	.914
miles	kilometers	1.609
sq. inches	sq. centimeters	6.451
sq. feet	sq. meters	.093
sq. yards	sq. meters	.836
sq. miles	sq. kilometers	2.590
acres	sq. hectometers	.405
cubic feet	cubic meters	.028
cubic yards	cubic meters	.765
fluid ounces	milliliters	29.573
pints	liters	.472
quarts	liters	.946
gallons	liters	3.785
ounces	grams	28.349
pounds	kilograms	.454
short tons	metric tons	.907
pound inches	newton-meters	.11296

To change	To	Multiply by
ounce inches	newton-meters	.0070062
centimeters	inches	.394
meters	feet	3.280
meters	yards	1.094
kilometers	miles	.621
sq. centimeters	sq. inches	.155
sq. meters	sq. yards	10.764
sq. kilometers	sq. miles	1.196
sq. hectometers	acres	2.471
cubic meters	cubic feet	35.315
milliliters	fluid ounces	.034
liters	pints	2.113
liters	quarts	1.057
grams	ounces	.035
kilograms	pounds	2.205
metric tons	short tons	1.102
pound-feet	newton-meters	1.356

Temperature (Exact)

°F Fahrenheit temperature — 5/9 (after subtracting 32) — Celsius Temperature °C

PIN: 062286-000